Doc.No. : C3100-E05C

EAC(TR CU)
SIL2 IP

Smart Pressure Transmitter

APT 3100

Differential / Gauge / Absolute Pressure Measurement
SIL 2 Certificate(IEC 61508)
Marine Certificate : ABS, BV, LR, DNV, KR
NAMUR NE43 Alarm & Saturation Output

AUTROL®

Manufacturer : DUON System Co.,Ltd.
Brand : AUTROL® www.autrol.com

2025. 10

APT 3100

Standard

SST Housing

Description of product

The APT3100 Smart Pressure Transmitter is a micro processor- based high performance transmitter, which has flexible pressure calibration and output, automatic compensation of ambient temperature and process variable, configuration of various parameters, communication with HART protocol. The application is very various, as measuring liquid, gas or steam flow as well as pressure and liquid level by application method. All data of sensor is to be input, modified and stored in EEPROM.

Function

- Flexible Sensor Input : DP, GP, HP, AP.
- Various Output : 4 ~20mA , Digital Signals.
- Setting Various Parameters : Zero/Span, Trim, Unit, Fail-mode, etc.
- Self Diagnostic Function : Sensor, Memory A/D Converter, Power, etc.
- Digital Communication with HART 5 protocol.
- Explosion-proof Approval : KCs, ATEX, FM, IECEx, EAC (Russia, CC TR CU).
- Waterproof : IP66/IP67.
- Marine Certificate: ABS, BV, LR, DNV, KR.
- SIL2 Certificate(IEC 61508).

Functional Block Diagram

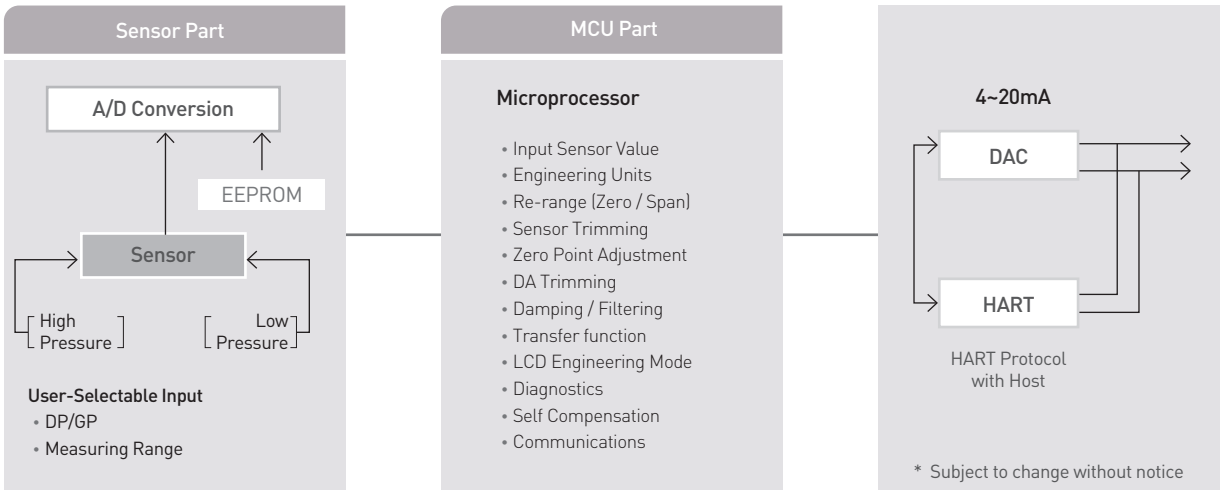

Features

• Superior Performance

· High Reference Accuracy : ±0.075% of Calibrated Span (The option : ±0.04% of Calibrated Span)
· for range 2
±0.25% of Span for 0.1URL ≤ Span ≤ URL
±[0.24 + (0.008 x (URL/span))]% of Span for 0.05URL ≤ Span ≤ 0.1URL
· for range 3
±0.075% of Span for 0.1URL ≤ Span ≤ URL
±[0.025 + (0.005 x (URL/span))]% of Span for 0.02URL ≤ Span ≤ 0.1URL
· for ranges 4 to 0
±0.075% of Span for 0.1URL ≤ Span ≤ URL
±[0.025+(0.005 x (URL/span))]% of Span for 0.01URL ≤ Span ≤ 0.1URL
· Long-Term Stability (0.125% URL for 3year)
· High Rangeability (100 : 1)(for the range 4-0)

• Flexibility

· Data Configuration with HART Configurator
· Zero Point Adjustment

• Reliability

· Continuous Self-Diagnostic Function
· Automatic Ambient Temperature Compensation
· Fail-mode Process Function
· EEPROM Write Protection

Transmitter Description

ATP3100 Pressure transmitter can be easily configured from any host that support the HART protocol

• Basic Setup

· Operational Parameters.
· 4~20mA Points (Zero/Span)
· Engineering Units
· Damping Time : 0.25 ~ 60 sec
· Tag : 8 alphanumeric characters
· Descriptor : 16 characters
· Message : 32 characters.
· Date : day/month/year

• Calibration and Trimming

· Lower/Upper Range (zero/span)
· Sensor Zero Trimming
· Zero Point Adjustment
· DAC Output Trimming

• Reliability

· Continuous Self-Diagnostic Function
· Automatic Ambient Temperature Compensation
· Fail-mode Process Function
· EEPROM Write Protection
· Transfer Function
· Self-Compensation

• Self-Diagnosis and Others

· CPU & Analog Module Fault Detection
· Communication Error
· Fail-mode Handling
· LCD Indication
·Temperature Measurement of Sensor Module

Function

• Range and Sensor Limits

· Refer to Table 1.

• Zero and Span Adjustment Limits

· Zero and span values can be set anywhere within the range limits stated in Table 1.(Page 9)
Span must be greater than or equal to the minimum span stated in Table 1.(Page 9)

• Output (Analog Current and Digital Data)

· LCD Display & ENG Mode
· Two wire 4~20mA
user-configurable for linear or square root output
digital process value superimposed on 4~20mA signal
available to any host that conforms to the HART protocol

• Power Supply & Load Requirement

· External power supply required.
*250 ohm load-- 15.5 Vdc / 17.5 Vdc (Ex ia)
*up to a 550 ohm load -- 24 Vdc
Max. Loop Resistance = (E - 10.5) /0.022
(E = Power Supply Voltage)
· Voltage Range : 10.5 / 12.5(Ex ia) to 45 Vdc
· Voltage Rating : 24 Vdc ±30%
· Loop Load
0 ~ 1,500 ohm -- Operation
250 ~ 550 ohm -- HART Communications

• EMC Conformity Standards

· CE EMC Conformity Standards[EN61326-1, EN61326-3]

• Failure Mode

	Normal	NAMUR NE43
Low Alarm	≤3.78 mA	≤3.6 mA
Low Saturation	3.9 mA	3.8 mA
High Saturation	20.8 mA	20.5 mA
High Alarm	≥21.1 mA	≥21.1 mA

• Ambient Temperature

· -40°C to 85°C (without condensing)

• Process Temperature Limits

(Range codes and approval codes may effect limits)
· -40°C to 120°C (-104 to 248°F)

Function

• Isolation

· Input/output isolated to 500Vrms (707 Vdc)

• Working Pressure Limits (silicone oil)

· Model D & G	0 ~ 13.79 MPa	# 3 ~ 8
· Model G	0 ~ 40.00 MPa	# 9
	0 ~ 75.00 MPa	# 0
· Model H	0 ~ 31.02 MPa	# 4 ~ 7
· Model A	0 ~ 525 kPa	# 4
	0 ~ 3,000 kPa	# 5
	0 ~ 5,250 kPa	# 6

• Hydrostatic Test Pressure

· Model D	3,000 psi (20.7 MPa)	
· Model H	6,750 psi (46.5 MPa)	
· Model G	2,000 psi (13.8 MPa)	# 3 ~ 8
	11,600 psi (80 MPa)	# 9
	11,600 psi (80 MPa)	# 0
· Model A	101.5 psi (700 kPa)	# 4
	580 psi (4000 kPa)	# 5
	1,015psi (7000 kPa)	# 6

• Burst Pressure

· Model	D, G, H	68.9 MPa
	G8~9	50 MPa
	G0	80 MPa
· Model	A4	1,050 kPa
	A5	4,000 kPa
	A6	7,000 kPa

• 5 Digit LCD

· Express all pressure unit and flow unit.
· Use 5 digit.
· Select decimal place (0 to 4)

• User define unit function

• Change main parameter by Button

· Change Unit
· Change Lower range value
· Select the Decimal Place
· Zero Adjustment
· Change Upper range value
· Change the Damping Second
· Zero Trim

- Moving within Menu
  Zero
- Moving to below Menu
  Span
- Moving Top Menu
  Zero+Span

• Button Menu tree

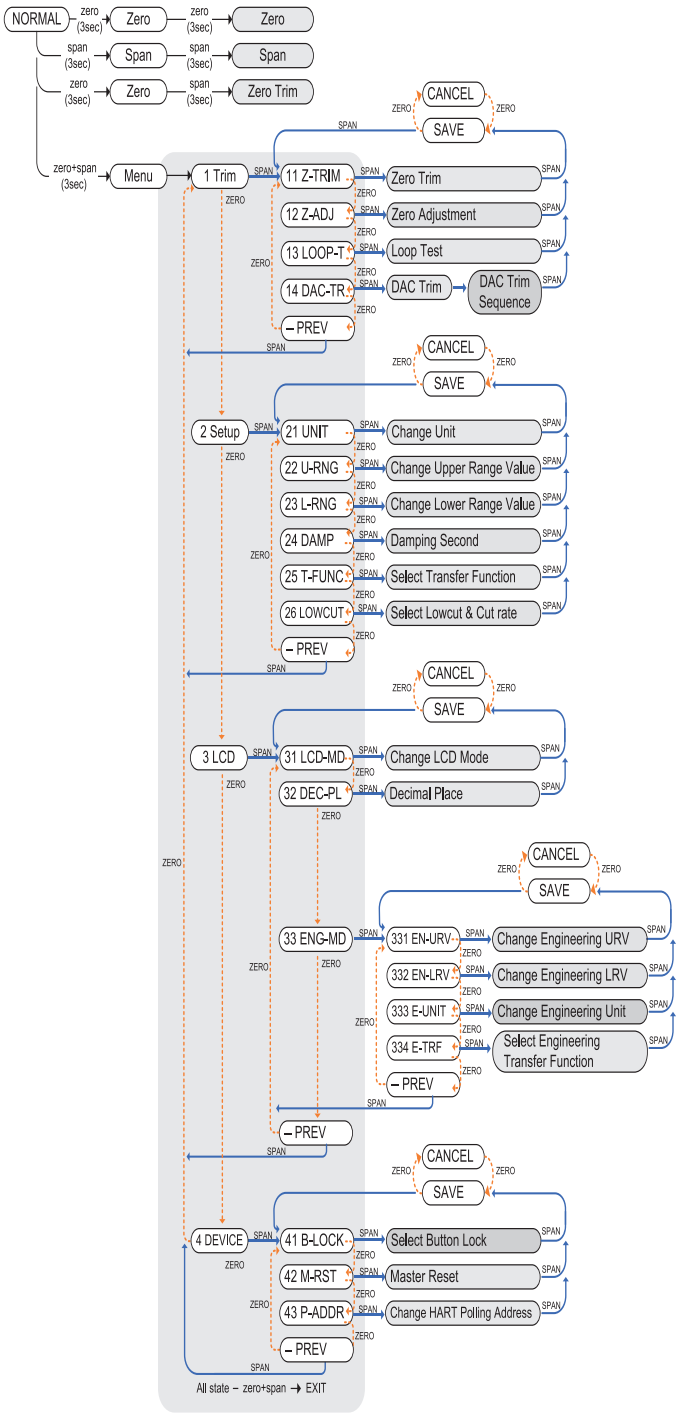

Physical Specifications

• Wetted Materials

· Isolating Diaphragms	316L SST, HAST-C Monel, Tantalum
· Drain/Vent Valves	316 SST, HAST-C
· Flanges and Adapters	316 SST(ASTMCF8M), HAST-C
· O-ring	Viton, PTFE

• Non-wetted materials

· Fill Fluid	Silicone oil or Inert fill
· Bolts	316 / 304 SST Adapter
· Electronics Housing	Aluminum or 316L SST (Option) Flameproof and Waterproof (IP67)
· Cover O-ring	NBR
· Paint	Epoxy-Polyester
· Mounting Bracket	304SST with U-bolt (304SST) for 2-inch pipe
· Nameplate	304 SST

• Electrical connections

· 1/2-14 NPT conduit with M4 Screw Terminals
· G1/2 Female Adapter(option)

• Process Connections

· 1/4-18 NPT on 2.126 inch (54.0 mm) centers on flanges for Standard
· 1/2-14 NPT on Process Adapter (option)
* Refer to drawing in the last page

• Weight

· 3.9 kg (Standard - excluding options)
5.35kg (SST Housing- excluding options)

Exploded drawing of APT3100

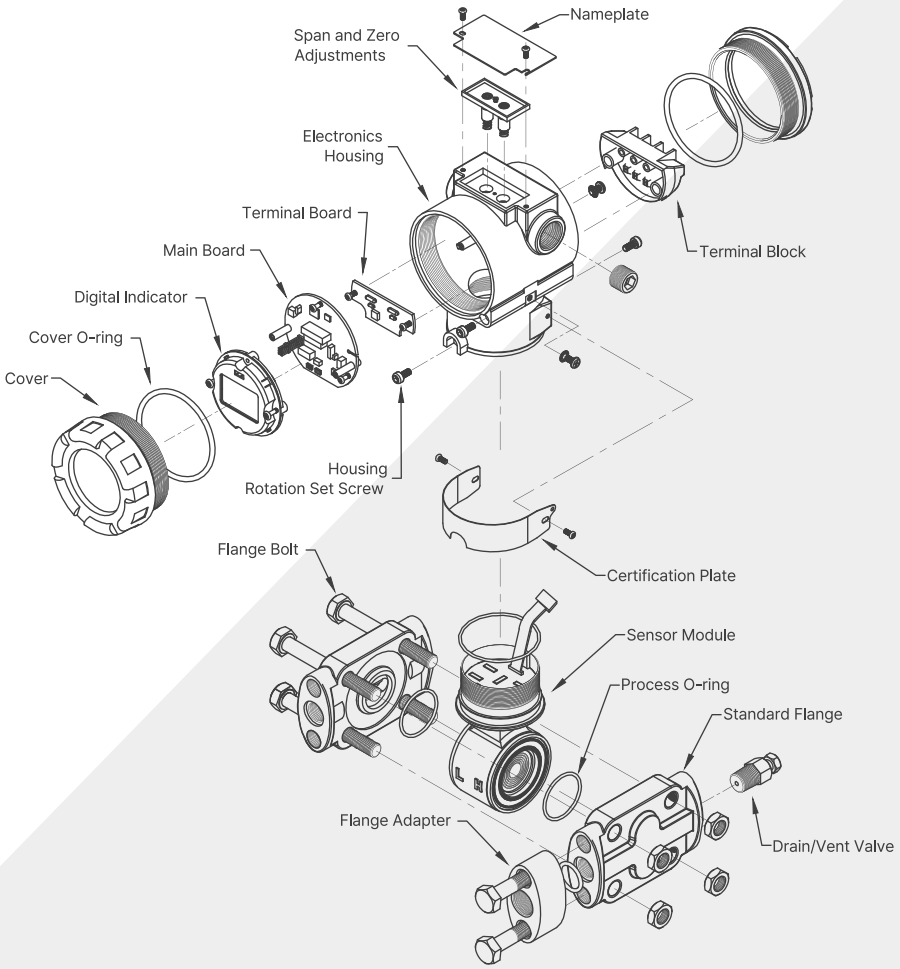

Hazardous Location Certifications (option)

- **KCs Flameproof / Dust Ignition-proof K1 Code :**

Flameproof for Class I, Zone 1 : Ex d II C T6, IP67
Dust Ignition-proof : Ex tD A20 T85°C IP67
Ambient Temperature : -20 to 60°C
Max. Process Temperature : 80°C
Power Supply : Max. 45 Vdc
Output : 4 to 20 mA + HART, Max. 22 mA

- **ATEX Flameproof E1 Code :**

Ⓔx II 2 G Ex db IIC T6... T4 Gb
Ⓔx II 2 D Ex tb IIIC T85°C... T130°C Db

- **ATEX Intrinsic Safety E2 Code :**

Ⓔx II 1 G or 2 G Ex ia IIC T5 or T4 Ga or Gb
Ambient temperature range :
- For T5 : -30°C to +40°C
- For T4 : -30°C to +80°C

- **IECEx Flameproof I1 Code :**

Ex Protection : Ex db IIC T6... T4 Gb,
Ex IIIC tb T85°C... T130°C Db
Ratings : Output : 4 to 20 mA

- **FM Explosion-proof F1 Code :**

Explosion proof for Class I,
Division 1, Groups A, B, C and D
Dust-ignition proof for Class II/III, Division 1,
Groups E, F and G
Nonincendive for Class I, Division 2, Groups A, B, C & D; Class II, Division 2, Groups E, F & G; and Class III, Division 1
Enclosure: NEMA Type 4X

- **EAC Flameproof R1 Code :**

1Ex d IIC T6... T5 Gb X IP66/IP67
Ambient Temperature : -60°C ... 60°C
T6 for process ≤ 85°C
T5 for process ≤ 100°C

- **EAC Intrinsic Safety R2 Code :**

0Ex ia IIC T5... T4 Ga X IP66/IP67
1Ex ia IIC T5... T4 Gb X IP66/IP67
Ambient Temperature :
T4 : -60°C ... 80°C
T5 : -60°C ... 40°C
HART : 250 Ohm load - 17.5Vdc
12.5 to 45 Vdc

- **NDK Approval Certification**

· Türkiye Nuclear Regulatory Authority
· Safety Class 4 (NP-001-15, NP-001-97)
· Code # : TR-1M0-154
· Certi # : E-70469638-120.02-15701

Connection Diagram of Signal Power, HHT for Transmitter

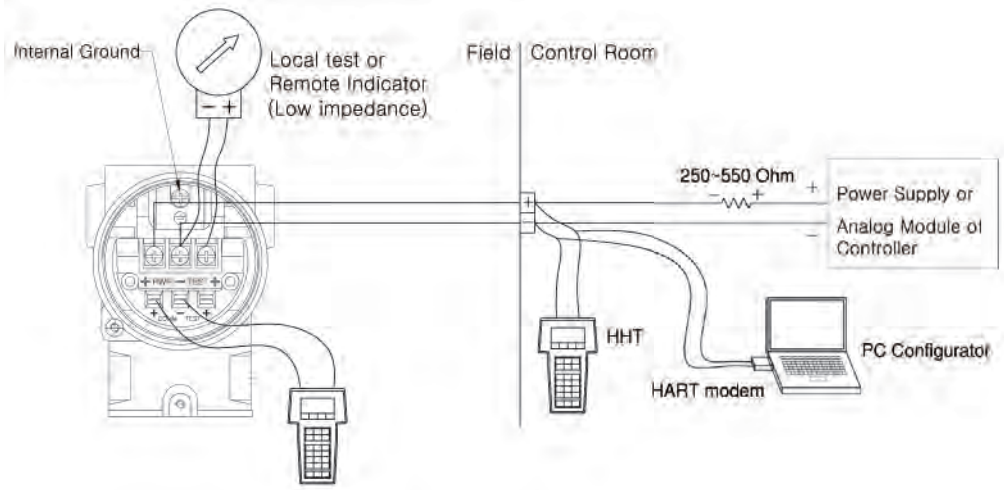

1. HHT(HART Communicator) or PC Configurator may connected at any termination point in the signal loop.
2. HART Communication requires a loop resistance between 250 ~ 550 ohm @ 24 Vdc.
3. Transmitter operates at 10.5 to 45 Vdc on transmitter terminal voltage.

APT **3100** MP OPTION

EASY INSTALLATION REGARDLESS FLUID LINE CONDITIONS

Advantage

Conventionally, in the case where the pressure transmitter should be vertically installed irrespective of the orientation of the fluid inflow lines, modified flanges are required in addition to the basic flanges. As a result, the modified flanges must be additionally provided.
Multi-planar pressure transmitter has been made in an effort to solve the problems occurring in the related
art, and an object of this multi planar is to provide a pressure transmitter, capable of being vertically installed without separate adaptor or various types of brackets regardless of the position of each fluid inflow line.A

Dimensions

*Dimensions of Transmitter may vary depending on the option selected.
Please contact the production company for more details.

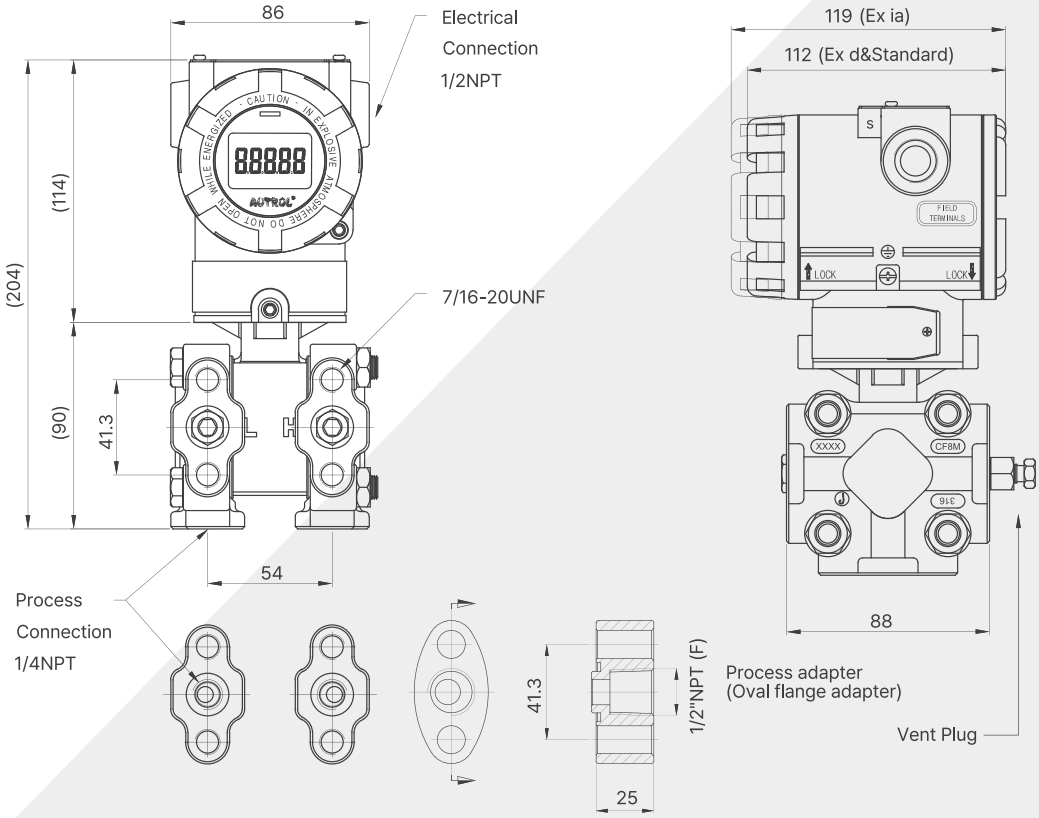

APT 3100F

Description

The APT3100-F model of the brand AUTROL series operates similarly to the standard APT3100 Differential type. It measures differential pressure and provides a 4 -20 mA output signal while also displaying the configured flow rate through Eng Mode function, which remains the same for all APT3100 models.

Additionally, APT3100-F offers a pulse output corresponding to the measured differential pressure. This pulse signal represents the corresponding flow rate and can be connected to an external relay or counter to monitor the accumulated total flow value. The compensation is only for the differential pressure value, not for the entire temperature & static pressure as with the flow meter.

APT3100-F is suitable for applications requiring DPT with the pulse output, particularly in large-scale or high-volume applications, where it measures flow by differential pressure using a flow element.

Pulse specification

» Scaled Pulse : A Single pulse is output for a specified flow amount.
» Pulse Width : 10ms, 50ms, 100ms selectable. (Negative going pulse)
» Duty Cycle : 49 Pulse/sec. Max.
» Output Type : Open Collector, 30V, 500mA Max.

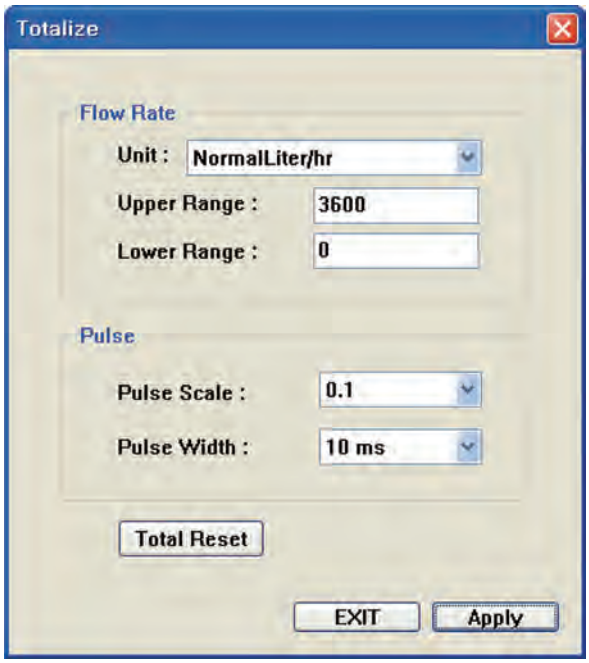

The picture of STT 20
(Autrol configuration program)

Wiring

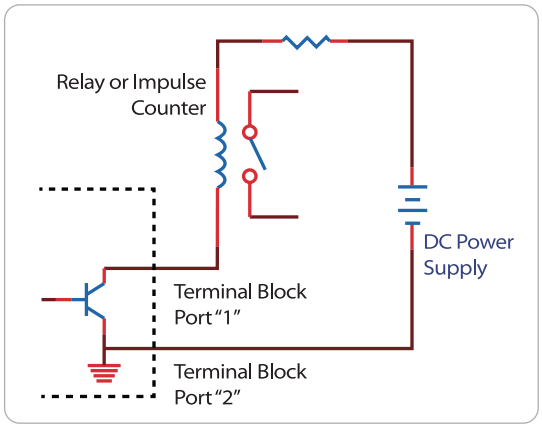

*In the case of connecting with Relay or Counter.

External Appearance

APT3100F is same shape with APT3100 but the terminal block is different.

1: Pulse out +
2: Pulse out –

1. APT3100 Pressure Sensor Range & URL

(Rangeability : #2=20:1 / #3=50:1 / 4~0=100:1)
<Table 1>

Range Code	DP/GP/HP/F					AP	
	Calibrated Span (kPa)	Upper Range (URL) (kPa)	Lower Range (LRL) (kPa)			Calibrated Span (kPa)	Range (kPa)
			D.P	G.P	H.P		
2	0.075 ~ 1.5	1.5	-1.5	-1.5	NA	NA	NA
3	0.15 ~ 7.5	7.5	-7.5	-7.5	NA	NA	NA
4	0.373 ~ 37.3	37.3	-37.3	-37.3	-37.3	2.5 ~ 250	0 ~ 250
5	1.865 ~ 186.5	186.5	-186.5	-100	-186.5	15 ~ 1,500	0 ~ 1,500
6	6.9 ~ 690	690	-690	-100	-690	25 ~ 2,500	0 ~ 2,500
7	20.68 ~ 2,068	2,068	-2,068	-100	-2,068	NA	NA
8	68.95 ~ 6,895	6,895	-6,895	-100	NA	NA	NA
9	206.8 ~ 20,680	20,680	NA	-100	NA	NA	NA
0	413.7 ~ 41,370	41,370	NA	-100	NA	NA	NA

Range Code	kPa	kgf/ cm^2	bar	psi	inH2O@4°C	mmH2O@4°C	inHg@0°C
2	1.5	0.015	0.015	0.217	6	152	0.442
3	7.5	0.076	0.075	1.087	30	765	2.215
4	37.3	0.38	0.373	5.41	149	3,804	11.014
5	186.5	1.902	1.865	27.049	749	19,018	55.072
6	690	7.036	6.9	100.073	2,773	70,361	203.75
7	2,068	21.088	20.68	299.93	8,310	210,878	610.66
8	6,895	70.309	68.95	1,000.009	27,708	703,097	2,036.025
9	20,680	210.876	206.8	2,999.303	83,105	2,108,781	6,106.597
0	41,370	421.856	413.7	6,000.211	166,085	4,218,566	12,216.55

2. Electrical Specifications

Power Supply	10.5 to 45 Vdc (min 12.5 Vdc @ Ex ia)	Output Signal	4 ~ 20 mA dc / HART
HART loop resistance	250 ~ 550 ohm	Isolation	500 Vrms (707 Vdc)

3. Performance Specifications

Reference Accuracy	± 0.075% of Span (0.1URL≤Span ≤URL) ±[0.025+0.005x(URL/Span)]% of Span (0.01URL≤Span<0.1URL)	Ambient Temperature	-40 ~ +85°C
		LCD Meter Ambient Temp	-30 ~ +80°C
		Humidity Limits	5% ~ 100% RH
Ambient Temp. Effect	±[0.019%URL+0.125% Span] / 28°C	Process Temperature Limits	-40°C ~ +120°C
Stability	±0.125% URL for 36 Months	Power Supply Effects	±0.005% of Span per Volt
Static Pressure Effects	±0.1% of URL per 7MPa (Zeor Error) ±0.2% of Reading per 7Mpa (Span Error)	Mounting Position Effets	Zero Shift up to 350Pa No Span Effect

4. Physical Specifications

Isolating Diaphragm	316L SST	Process Connection Size	1/4 - 18 NPT
Drain & Vent Valve	316 SST	Adapter Bolts	1/2 – 14 NPT
Flange & Adapter	316 SST	Electrical Connections	1/2 – 14 NPT with M4
O-ring	Viton, PTFE	Weight (excluding Option Items)	3.9 Kg (Standard) 5.35Kg(SST Housing)
Electronic Housing	Alloy, 316 SST	2" Pipe Stanchion Type bracket	Angle or Flat type
Bolts & Bolting Flange	304 SST	Housing Class	Ex, IP66/67

Ordering Information

MODEL	Code	Description
APT3100	-D	Differential Pressure Transmitter (Static Pressure 13.79Mpa/ 2,000psi)
	-F	Flow Transmitter (on the principle of Differential Pressure Use and only for Head)
	-G	Gauge Pressure Transmitter
	-H	Differential Pressure Transmitter for High Line Pressure (Static Pressure 31.02Mpa / 4,500psi)
	-A	Absolute Pressure Transmitter

Ranges		DP/GP/HP					*AP
		Calibrated Span Min. to Max	Lower Range Limit			Upper Range Limit	Range
			APT3100-D	APT3100-G	APT3100-H		APT3100-A
	2	0.075 ~ 1.5 kPa	-1.5 kPa	-1.5 kPa	NA	1.5 kPa (6.022 inH2O)	NA
	3	0.15 ~ 7.5 kPa	-7.5 kPa	-7.5 kPa	NA	7.5 kPa (30 inH2O)	NA
	4	0.373 ~ 37.3 kPa	-37.3 kPa	-37.3 kPa	-37.3 kPa	37.3 kPa (150 inH2O)	0~250 kPa
	5	1.865 ~ 186.5 kPa	-186.5 kPa	-100kPa	-186.5 kPa	186.5 kPa (750 inH2O)	0~1,500 kPa
	6	6.9 ~ 690 kPa	-690 kPa	-100kPa	-690 kPa	690 kPa (100 psi)	0~2,500 kPa
	7	20.68 ~ 2,068 kPa	-2,068 kPa	-100kPa	-2,068 kPa	2,068 kPa (300 psi)	NA
	8	68.95 ~ 6,895 kPa	-6,895 kPa	-100kPa	NA	6,895 kPa (1000 psi)	NA
	9	206.8 ~ 20,680 kPa	NA	-100kPa	NA	20,680 kPa (3000 psi)	NA
	0	413.7 ~ 41,370 kPa	NA	-100kPa	NA	41,370 kPa (6000 psi)	NA
	X	Special					

Mounting Flange /Material		Flange	Vent Plug	Diaphragm
	M10	316L SST	316L SST	316L SST
	M11	316 SST	316 SST	316L SST
	M12	316 SST	316 SST	HAST - C
	M13	316 SST	316 SST	Monel
	M14	316 SST	316 SST	Tantalum
	*M21	HAST - C	HAST - C	HAST - C
	*M22	HAST - C	HAST - C	Monel
	*M23	HAST - C	HAST - C	Tantalum

Hazardous Location Certifications				
	K0	Maker Standard (Waterproof : IP66/ IP67)		
	K1	KCs Flameproof / Dust Ignition-proof		
	E1	ATEX Flameproof	E2	ATEX Intrinsic Safety
	I1	IECEx Flameproof	F1	FM Explosion-proof
	R1	EAC Flameproof	R2	EAC Intrinsic Safety
	R3	EAC Flameproof, Intrinsic Safety		

Fill Fluid	1	Silicone (DC200)	2	Inert Fill Fluid (Halocarbon Oil)		
Process Connection	S	1/4 - 18 NPT (Standard)	O	1/2 - 14 NPT Female (Adapter)	X	Special
Electrical Conn ection	1	1/2-14NPT Epoxy-Polyester Painted Aluminum	2	G1/2 Epoxy-Polyester Painted Aluminum(Adapter)	X	Special

Option				
	M1	LCD Indicator(5digit)	M2	Back Light LCD Indicator
	MP	Multi-Planar		
	LPI	Lightening Protector (Internal)	LPE	Lightening Protector (External)
	K	Oil Free Finish		
	F1	Side Vent / Drain Top		
	F2	Side Vent / Drain Bottom		
	2W	2 Way Manifold (SST) : Remote type type	2WF	Flange type
	3W	3 Way Manifold (SST) : Remote type type	3WF	Flange type
	5W	5 Way Manifold (SST) : Remote type type	5WF	Flange type
	BA	Stainless Steel Bracket (Angle type) with SST Bolts		
	BF	Stainless Steel Bracket (Flat type) with SST Bolts		
	ST	Stainless Steel Housing		
	T	Teflon O-Ring (Wetted Part)		
	MR	Marine & Offshore Type approval by DNV-GL, LR, BV, ABS, KR (shall use LPI option) *		
	SL	SIL2 (Safety certified to IEC 61508 with certificate, FMDEA) by SGS/TUV *		
	N4	NAMUR NE43 Alarm & Saturation Output (Default: Alarm Down 3.6 mA) *		
	X	Special		

Example : APT3100-D5-M11-E1-1-S-1-M1-BA

Note 1 : Request to manufacturer for Draft Range, Absolute (small pressure and vacuum) and Items marked " * " before order.

Note 2 : Depending on applications, the APT3100-L model offers various special remote diaphragm seal models.
please contact the manufacturer for details.

Installation With Mounting Bracket

01 PIPE MOUNTING BRACKET MODEL FLAT TYPE

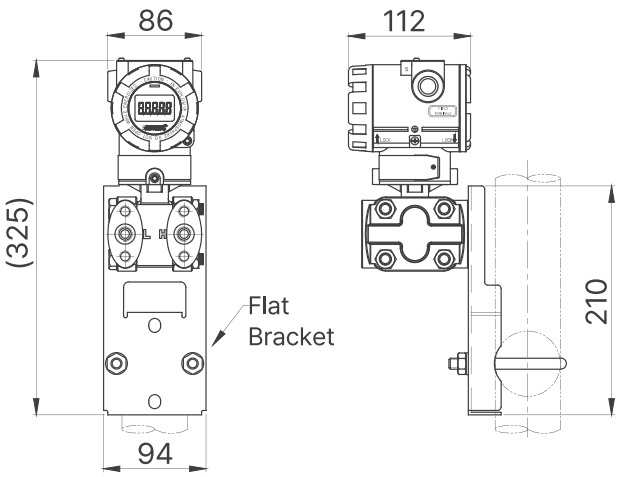

< Standard Model >

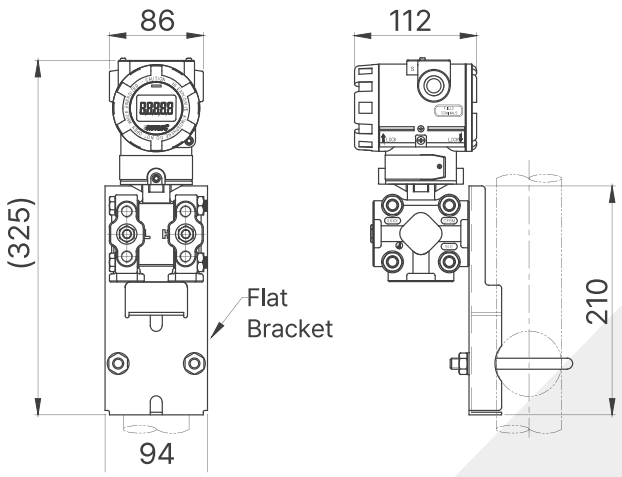

< MP Type Model >

02 PIPE MOUNTING BRACKET MODEL ANGLE TYPE

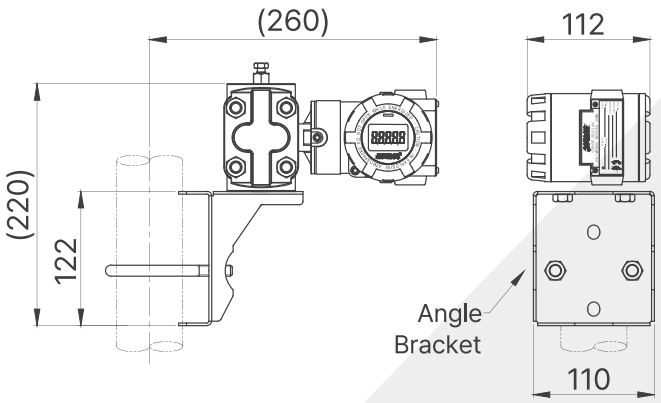

< Standard Model >

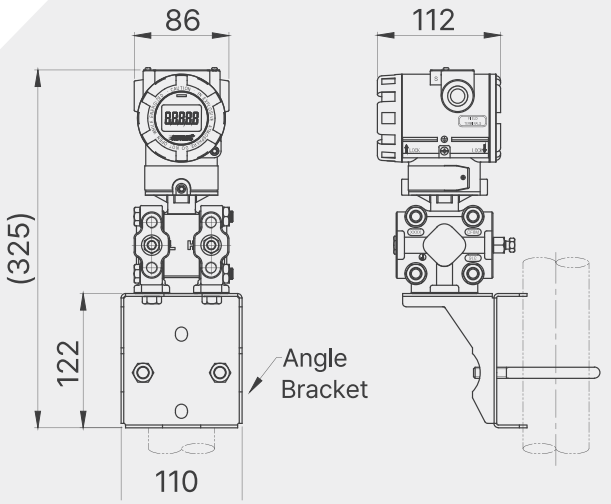

< MP Type Model >

Dimensions of Transmitter (mm)

Dimensions of Transmitter may vary depending on the option selected.
Please contact the production company for more details.

[Standard IP66/67 / Ex d / Ex ia Model]

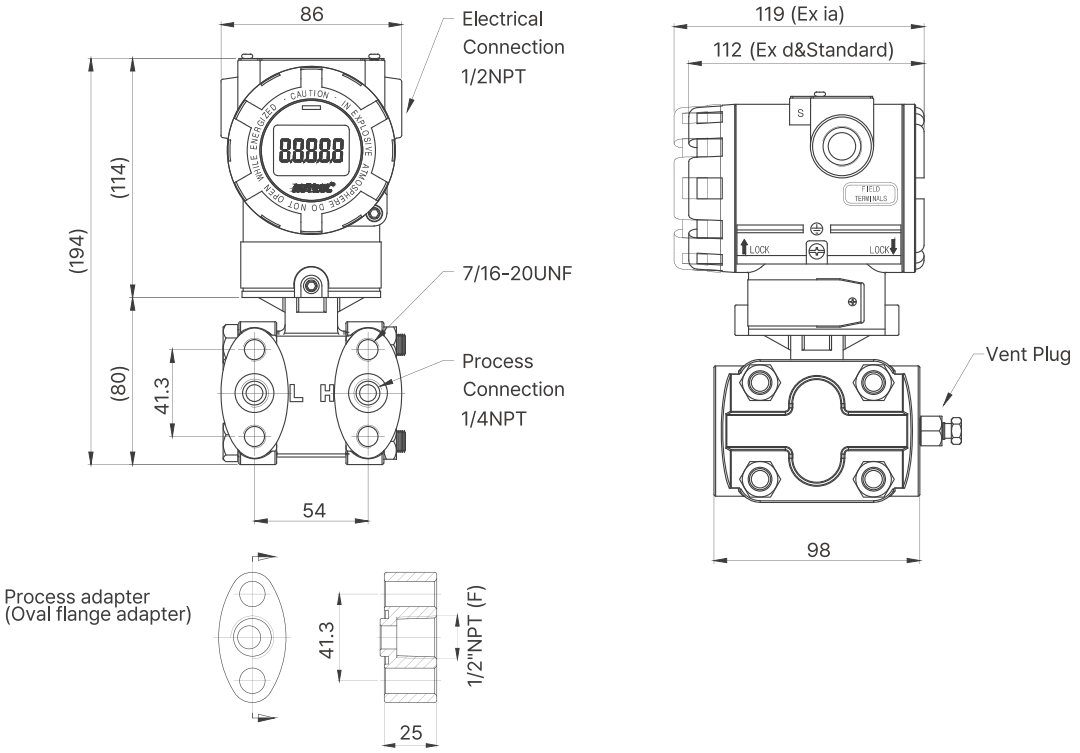

DUON System Co., Ltd.

298-29, Gongdan-ro, Gunpo-si, Gyeonggi-do, Korea 15809
T : +82. 31. 389. 6100 F : +82. 31. 429. 7200 E : autrol@duon.co.kr
www.autrol.com

Copyright © 1989 DUON System Co., Ltd. All rights reserved.

AUTROL®, AUTROLTM are trade mark of smart transmitter brand series to measure Pressure, Temperature and Level, which is manufactured & owned by DUON System Co., Ltd(hereafter DUON) since 1989. AUTROL®, AUTROLTM series also provide services of electric appliance installation, repair of electric, magnetic measuring instruments, electric appliance repair, repair of instruments and appliances for measuring and testing, repair of computer hardware, repair of electronic application machines and apparatus, repair of instruments and appliances for rotating, repair of electric power distribution machines and apparatus, repair of control machines and apparatus, computer hardware maintenance and administration, computer hardware installation. APT3500-Differential and high accuracy pressure Transmitter APT3100-Differential pressure Transmitter, APT3200-Gauge & Absolute pressure Transmitter, ATT2X00 series-Temperature Transmitter, AI100-Field Indicator, ALT6XX0 series-Level Transmitter.