APT **3200**

Standard

SST Housing

High Static Pressure

Description of product

The APT3200 Smart Pressure Transmitter is a micro processor based high performance transmitter, which has flexible pressure calibration and output, automatic compensation of ambient temperature and process variable, configuration of various parameters, communication with HART protocol.
All Data of Sensor (Tag No., type, range etc.) is to be input, modified and stored in EEPROM.

Function

- Flexible Sensor Input : GP, FP(Flush Mount), AP.
- Various Output : 4 ~ 20mA, Digital Signals.
- Setting Various Parameters : Zero/Span, Trim, Unit, Fail-mode, etc.
- Self Diagnostic Function : Sensor, Memory A/D Converter, Power, etc.
- Digital Communication with HART 5/7 protocol.
- Explosion-proof & Intrinsic Safety Approval : KCs, ATEX, FM, IECEx, EAC(Russia, CC TR CU).
- Waterproof : IP66/IP67
- Marine Certificate : ABS, BV, LR, DNV, KR.
- SIL2 Certificate(IEC 61508).

Functional Block Diagram

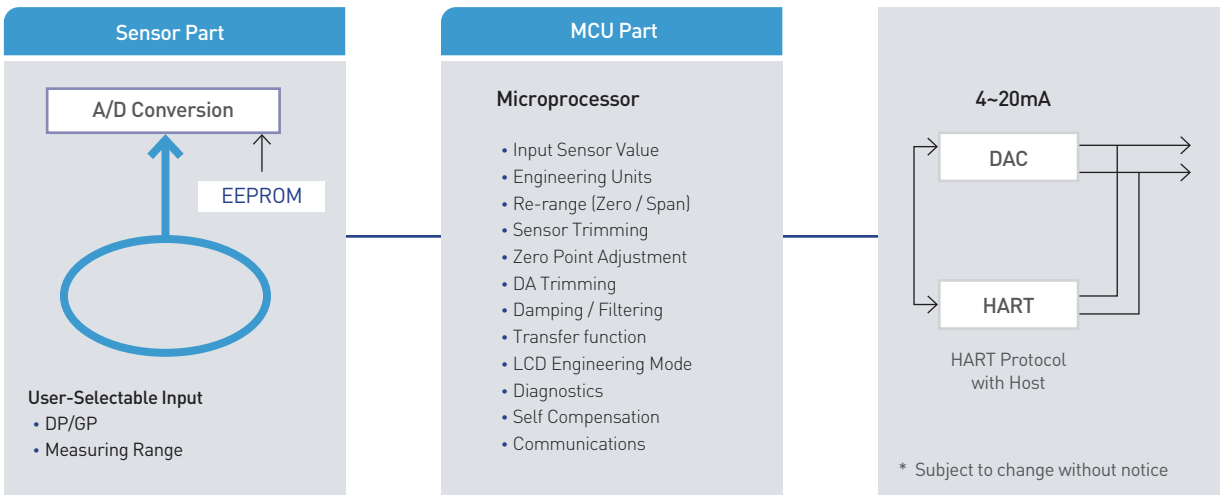

Features

• Superior Performance

· High Accuracy : ±0.075% of Calibrated Span(option : ± 0.04% of Calibrated Span)
· for range 3 to 7(GP, FP), 4 to 6(AP)
±0.075% of Span for 0.1URL ≤ Span ≤ URL
±[0.025+0.005x(URL/Span)]% of Span
for 0.01URL ≤ Span ≤ 0.1URL
· for range 8(GP)
±0.15% of Span for 0.1URL ≤ Span ≤ URL
± [0.08+0.007x(URL/Span)]% of Span
for 0.01URL ≤ Span ≤ 0.1URL
· Long-Term Stability(0.125% URL for 3year)
(for the range 3~7)
· High Rangeability (100:1)

• Flexibility

· Measuring GP, FP, AP
· Data Configuration with HART configurator

• Reliability

· Continuous Self-Diagnostic Function
· Automatic Ambient Temperature Compensation
· Fail-mode Process Function
· EEPROM Write Protection

Transmitter Description

ATP3200 Pressure transmitter can be easily configured from any host that support the HART protocol

• Basic Setup

· Operational Parameters.
· 4~20mA Points (Zero/Span)
· Damping Time : 0.25 ~ 60 sec
· Tag : 8 alphanumeric characters
Long Tag : 32 alphanumeric characters(HART 7 Ver.)
· Descriptor : 16 characters
· Message : 32 characters.
· Date : day/month/year

• Calibration and Trimming

· Lower/Upper Range (zero/span)
· Sensor Zero Trimming
· Zero Point Adjustment
· DAC Output Trimming
· Transfer Function
· Self-Compensation

• Self-Diagnosis and Others

· CPU & Analog Module Fault Detection
· Communication Error
· Fail-mode Handling
· LCD Indication
· Temperature Measurement of Sensor Module

Function

• Range and Sensor Limits

· Refer to Table 1.

• Zero and Span Adjustment Limits

· Zero and span values can be set anywhere within the range limits stated in Table 1.
Span must be greater than or equal to the minimum span stated in Table 1.

• Output (Analog Current and Digital Data)

· LCD Display & ENG Mode
· Two wire 4~20mA user-configurable for linear.
digital process value superimposed on 4~20mA signal, available to any host that conforms to the HART protocol.

• Power Supply & Load Requirement

· External power supply required.
*250 ohm load-- 15.5 Vdc / 17.5 Vdc (Ex ia)
*up to a 550 ohm load -- 24 Vdc
Max. Loop Resistance = (E - 10.5) / 0.022
(E = Power Supply Voltage)
· Voltage Range : 10.5 / 12.5(Ex ia) to 45 Vdc
· Voltage Rating : 24 Vdc ±30%
· Loop Load
0 ~ 1,500 ohm -- Operation
250 ~ 550 ohm -- HART Communications

• EMC Conformity Standards

· CE EMC Conformity Standards (EN61326-1, EN61326-3)

• Failure Mode

	Normal	NAMUR NE43
Low Alarm	≤3.78 mA	≤3.6 mA
Low Saturation	3.9 mA	3.8 mA
High Saturation	20.8 mA	20.5 mA
High Alarm	≥21.1 mA	≥21.1 mA

• Ambient Temperature

· -40°C to 85°C (without condensing)

• Process Temperature Limits

(Range codes and approval codes may effect limits)
· -40°C to 120°C (-104 to 248°F)

• Isolation

· Input/output isolated to 500Vrms (707 Vdc)

• Working Pressure Limits (silicone oil)

· Model G(F)	-100 ~ 300kPa	# 3
	-100 ~ 3,000 kPa	# 4
	0 ~ 10,500 kPa	# 5
	0 ~ 40,000 kPa	# 6
	0 ~ 75,000 kPa	# 7
	0 ~ 110,000 kPa	# 8
· Model A	0 ~ 525 kPa	# 4
	0 ~ 3,000 kPa	# 5
	0 ~ 5,250 kPa	# 6

• HART option

Device	HART version	
APT3200	5	7(Option)

Physical Specifications

• Wetted Materials

· Isolating Diaphragms : 316L SST, HAST-C, Monel, Tantalum

• Non-wetted materials

· Fill Fluid : Silicone oil (DC200)
· Electronics Housing : Aluminum, SST316L(option)
Flameproof and Waterproof (IP66/67)
· Cover O-ring : NBR
· Paint : Epoxy-Polyester
· Mounting Bracket : 304SST with U-bolt (304SST) for 2-inch pipe
· Nameplate : 304 SST

• Process Connections

· 1/2-14 NPT Female · 1/4-18 NPT Adapter(option)

• Electrical connections

· 1/2-14 NPT conduit with M4 Screw Terminals
· G1/2 Adapter (option)

• Weight

· 1.7 kg (Standard - excluding options)
· 2.83kg (SST Housing- excluding options)

Function

• Change main parameter by Button

· Change Unit
· Change Upper range value
· Change Lower range value
· Change the Damping Second
· Select the Decimal Place
· Zero Trim
· Zero Adjustment

• User define unit function

Hazardous Location Certifications (option)

• KCs Flameproof / Dust Ignition-proof K1 Code :

· Flameproof for Class I, Zone 1 : Ex d IIC T6, IP67
· Dust Ignition-proof : Ex tD A20 T85°C IP67
· Operating Temperature : -20 to 60°C Max.
· Process Temperature : 80°C
· Power Supply : Max. 45 Vdc
· Output : 4 to 20 mA + HART, Max. 22 mA

• ATEX Flameproof E1 Code :

Ⓔx II 2 G Ex db IIC T6... T4 Gb
Ⓔx II 2 D Ex tb IIIC T85°C... T130°C Db

• ATEX Intrinsic Safety E2 Code :

Ⓔx II 1 G or 2 G Ex ia IIC T5 or T4 Ga or Gb
Ambient temperature range :
- For T5 : -30°C to +40°C
- For T4 : -30°C to +80°C
- HART : 250 Ohm load - 17.5Vdc
- 12.5 to 45 Vdc

• IECEx Flameproof I1 Code :

· Ex Protection :
Ex db IIC T6... T4 Gb, Ex tb IIIC T85°C... T130°C Db
· Ratings : Output : 4 to 20 mA

• FM Explosion-proof F1 Code

Explosion proof for Class I, Division 1 Groups A, B, C and D
Dust-ignition proof for Class II/ III, Division 1, Groups E, F and G
Nonincendive for Class I, Division 2, Groups A, B, C & D;
Class II, Division 2, Groups E, F & G; and Class III, Division 1
Enclosure: NEMA Type 4X

• EAC Flameproof R1 Code :

· 1Ex d IIC T6... T4 Gb X IP66/IP67
· Ambient Temperature : -60°C ... 60°C
· T6 for process ≤ 85°C
· T5 for process ≤ 100°C
· T4 for process ≤ 130°C

• EAC Intrinsic Safety R2 Code :

· 0Ex ia IIC T5... T4 Ga X IP66/IP67
· 1Ex ia IIC T5... T4 Gb X IP66/IP67
· Ambient Temperature : T4 : -60°C ... 80°C
T5 : -60°C ... 40°C

• NDK Approval Certification

· Türkiye Nuclear Regulatory Authority
· Safety Class 4 (NP-001-15, NP-001-97)
· Code # : TR-1M0-154
· Certi # : E-70469638-120.02-15701

Connection Diagram of Signal, Power HHT for Transmitter

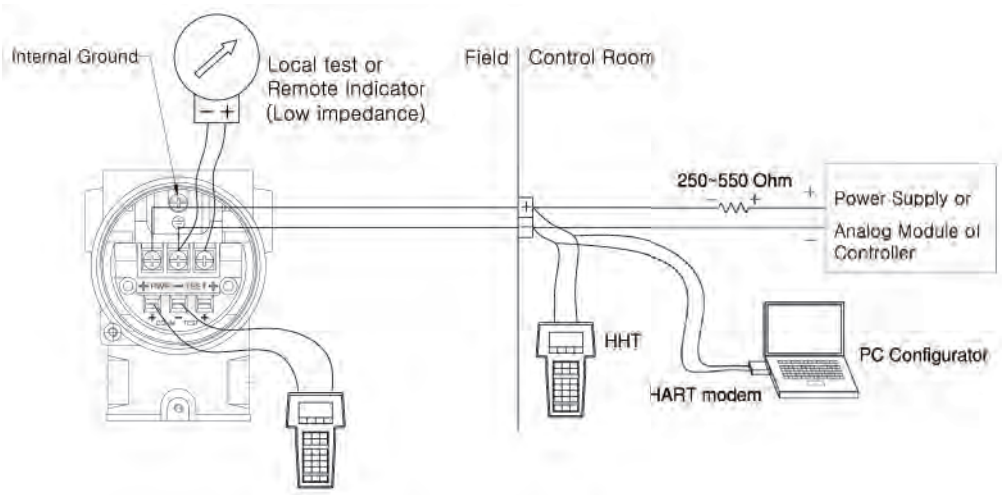

1. HHT(HART Communicator) or PC Configurator may connected at any termination point in the signal loop.
2. HART Communication requires a loop resistance between 250 ~ 550 ohm @ 24 Vdc.
3. Transmitter operates at 10.5 to 45 Vdc on transmitter terminal voltage.

Exploded drawing of APT3200

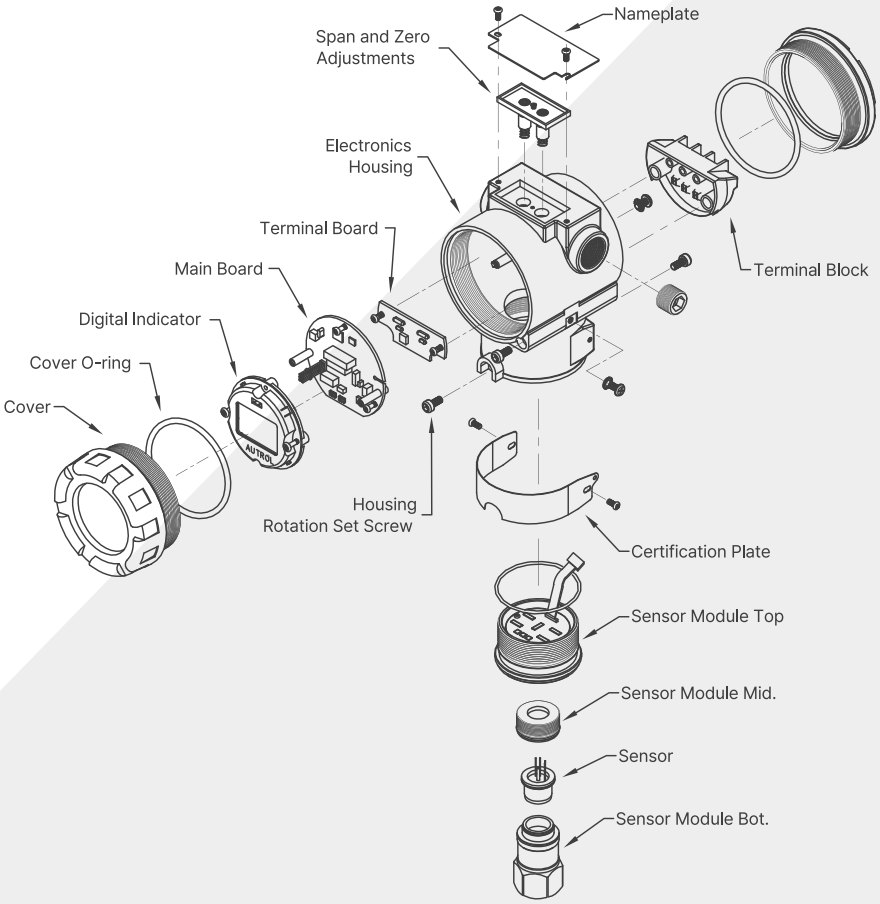

General Specifications

1. APT3200 – G/A Pressure Sensor Range (Rangeability = 100 : 1)

	APT3200 – G		APT3200 - A	
	Range (kPa)	Calibrated Span (kPa)	Range	Calibrated Span (kPa)
3	-100 ~ 150	1.5 ~ 150	NA	NA
4	-100 ~ 1,500	15 ~ 1,500	0 ~ 250	2.5 ~ 250
5	0 ~ 5,000	50 ~ 5,000	0 ~ 1,500	15 ~ 1,500
6	0 ~ 25,000	250 ~ 25,000	0 ~ 2,500	25 ~ 2,500
7	0 ~ 60,000	600 ~ 60,000	NA	NA
8	0 ~ 100,000	1,000 ~ 100,000	NA	NA

2. Electrical Specifications

Power Supply	Voltage Range : 10.5 to 45 Vdc (min 12.5 to 45 Vdc @ Ex ia) Voltage Rating : 24 Vdc ±30%	Output Signal	4 ~ 20 mA dc / HART
HART Loop Resistance	250 ~ 550 ohm	Isolation	500 Vrms (707 Vdc)

3. Performance Specifications

Reference Accuracy	± 0.075% of Span *See the specification feature on 3 page	Ambient Temperature	-40°C ~ +85°C
		LCD Meter Ambient Temp	-30°C ~ +80°C
		Humidity Limits	5% ~ 100% RH
Ambient Temp. Effect	± [0.019%URL+0.125% Span] /28°C	Process Temp. Limit	-40°C ~ +120°C
		Power Supply Effect	± 0.005 % of Span per Volt
		Stability	± 0.125%URL for 36 months

4. Physical Specifications

Isolating Diaphragm	316L SST	Process Connection Size	1/2 -14 NPT Female
Electronic Housing	Alloy, 316 SST	Electrical Connections	1/2 - 14 NPT with M4
Housing Class	Ex, IP66/67	2"Pipe Stanchion Type Bracket	Angle or Flat type
		Weight (excluding options)	1.7 kg (standard) 2.83kg(SST Housing)

Ordering Information

<Table 1>

MODEL	Code	Description			
APT3200	-G	Gauge Pressure Transmitter (reference accuracy : 0.075 % of span)			
	-F	Flush Mount Pressure Transmitter			
	-A	Absolute Pressure Transmitter (reference accuracy : 0.075 % of span)			
Range		G/F		A	
		Range (kPa)	Min.Span (kPa)	Range (kPa)	Min.Span (kPa)
	3	-100 ~ 150	1.5	NA	NA
	4	-100 ~ 1,500	15	0 ~ 250	2.5
	5	0 ~ 5,000	50	0 ~ 1,500	15
	6	0 ~ 25,000	250	0 ~ 2,500	25
	7	0 ~ 60,000	600	NA	NA
	8	0 ~ 100,000	1,000	NA	NA
	X	Special			
Mounting Flange Material		DIAPHRAGM		OTHER	
	M11	316L SST		316 SST	
	*M12	HAST-C		316 SST	
	*M13	Monel		316 SST	
	*M14	Tantalum		316 SST	
	*M15	316L SST + Gold Coating		316 SST	
	*M21	HAST-C		HAST-C	
Hazardous Location	K0	Maker Standard (Waterproof:IP66/IP67)			
	K1	KCs Flameproof / KCs DustIgnition-proof Approval			
	E1	ATEX Flameproof	E2	ATEX Intrinsic Safety	
	I1	IECEx Flameproof	F1	FM Explosion-proof	
	R1	EAC Flameproof	R2	EAC Intrinsic Safety	
	R3	EAC Flameproof, IntrinsicSafety			
Fill Fluid	1	Silicone (DC20)			
	*2	Inertfill (Halocarbon Oil)			
Process Connection	S	1/2–14 NPT Female (standard)			
	O	1/4-18 NPT Female (adapter)			
	X	Special			
Electrical Connection	1	1/2-14 NPT Epoxy-Polyester Painted Aluminum			
	2	G1/2 Epoxy-Polyester Painted Aluminum (Adapter)			
	X	Special			
Option	M1	LCDIndicator	M2	Back Light LCD Indicator	
	LPI	Lightning Protector (Internal)	LPE	Lightning Protector (External)	
	K	Oil Free Finish			
	2W	2 way manifold Remote type			
	BA	Stainless Steel Bracket (Angle type) with SST Bolts			
	BF	Stainless Steel Bracket (Flat type) with SST Bolts			
	ST	Stainless Steel Housing			
	MR	Marine & Offshore Type approval by DNV-GL, LR, BV, ABS, KR (shall use LPI option) *			
	SL	SIL2 (Safety certified to IEC 61508 with certificate, FMEDA)			
	H7	HART7			
	N4	NAMUR NE43 Alarm & Saturation Output (Default: Alarm Down 3.6 mA)			
	X	Special			

Example : APT3200-G5M11K01S1-M1BA
Note 1 : Request to manufacturer for Draft Range, Absolute (small pressure and vacuum) and Items marked " * " before order.
Note 2 : Depending on applications, the APT3200-L model offers various special remote diaphragm seal models.
please contact the manufacturer for details.

Dimensions of Transmitter (mm)

Dimensions of Transmitter may vary depending on the option selected.
Please contact the production company for more details.

[Standard IP66/67 / Ex d / Ex ia Model]

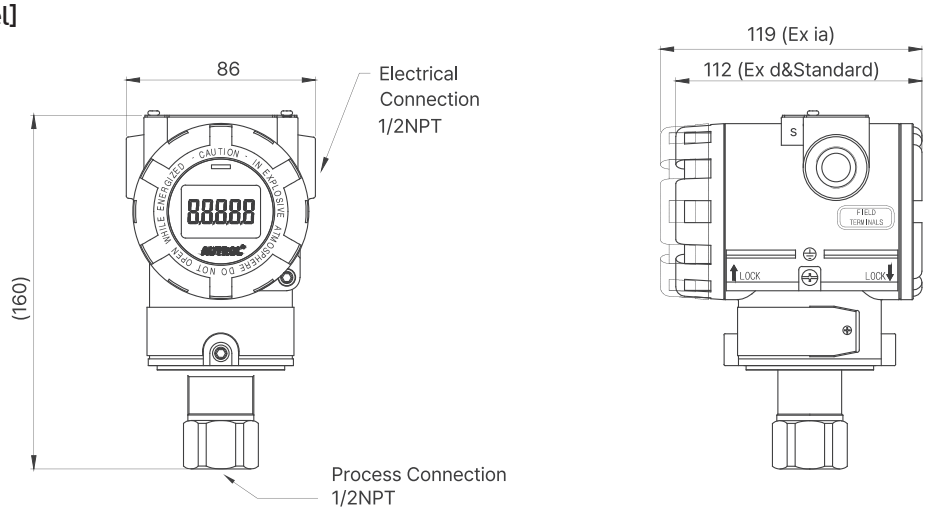

[Flush Mount Model]

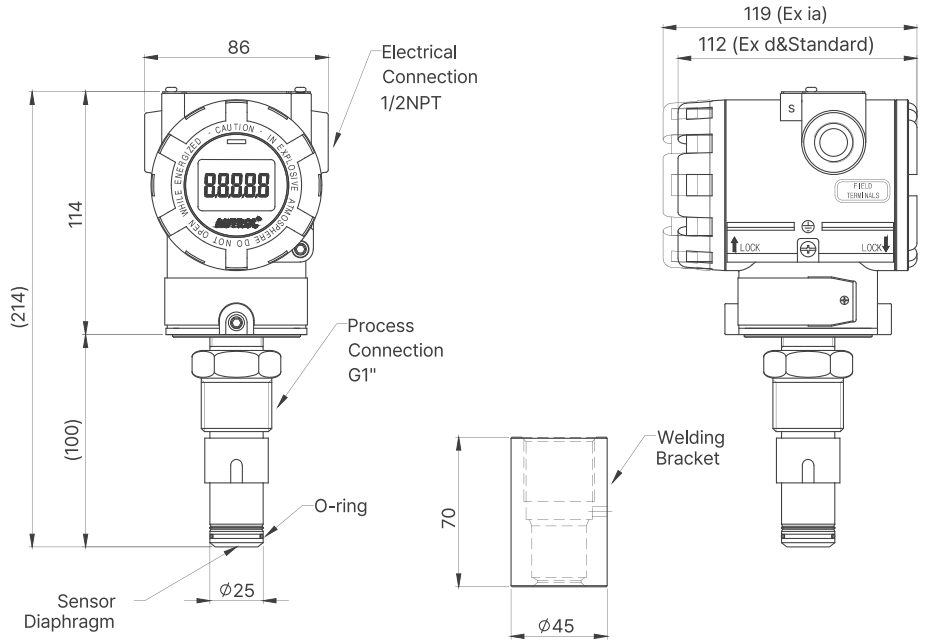

DUON System Co., Ltd.

298-29, Gongdan-ro, Gunpo-si, Gyeonggi-do, Korea 15809
T : +82. 31. 389. 6100 F : +82. 31. 429. 7200 E : autrol@duon.co.kr
www.autrol.com

Copyright © 1989 DUON System Co., Ltd. All rights reserved.

AUTROL®, AUTROLTM are trade mark of smart transmitter brand series to measure Pressure, Temperature and Level, which is manufactured & owned by DUON System Co., Ltd(hereafter DUON) since 1989. AUTROL®, AUTROLTM series also provide services of electric appliance installation, repair of electric, magnetic measuring instruments, electric appliance repair, repair of instruments and appliances for measuring and testing, repair of computer hardware, repair of electronic application machines and apparatus, repair of instruments and appliances for rotating, repair of electric power distribution machines and apparatus, repair of control machines and apparatus, computer hardware maintenance and administration, computer hardware installation. APT3500-Differential and high accuracy pressure Transmitter APT3100-Differential pressure Transmitter, APT3200-Gauge & Absolute pressure Transmitter, ATT2X00 series-Temperature Transmitter, AI100-Field Indicator, ALT6XX0 series-Level Transmitter.