Doc.No. : C3500-E05C

HART COMMUNICATION PROTOCOL · CE · EAC(TR CU) · SIL2 IP

Smart Pressure Transmitter

APT 3500

Differential / High Static / Gauge Absolute Pressure Measurement

Best performance 0.04%

High Accuracy

Five year stability under Actual process conditions

SIL 2 Cerificate(IEC 61508)

NAMUR NE43 Alarm & Saturation Output

AUTROL®

Manufacturer : DUON System Co.,Ltd.

Brand : AUTROL® www.autrol.com

2025. 10

APT 3500

Standard

SST Housing

High Static Pressure

Description of product

The APT3500 Smart Pressure Transmitter is a micro processor- based high performance transmitter which has flexible pressure calibration and output, automatic compensation of ambient temperature and process variable, configuration of various parameters, communication with HART protocol. The application is very various, as measuring liquid, gas or steam flow as well as pressure and liquid level by application method. All data of sensor is to be input, modified and stored in EEPROM.

Function

- Flexible Sensor Input : DP, GP, HS, AP.
- Various Output : 4 ~20mA , Digital Signals.
- Setting Various Parameters : Zero/Span, Trim, Unit, Fail-mode, etc.
- Self Diagnostic Function : Sensor, Memory A/D Converter, Power, etc.
- Digital Communication with HART 7 protocol.
- Explosion-proof Approval & Intrinsic Safety Approval : KCs, ATEX, IECEx, FM, EAC(Russia, CC TR CU).
- Waterproof : IP66/IP67.
- Marine Certificate: KR.
- SIL2 Certificate(IEC 61508).

Functional Block Diagram

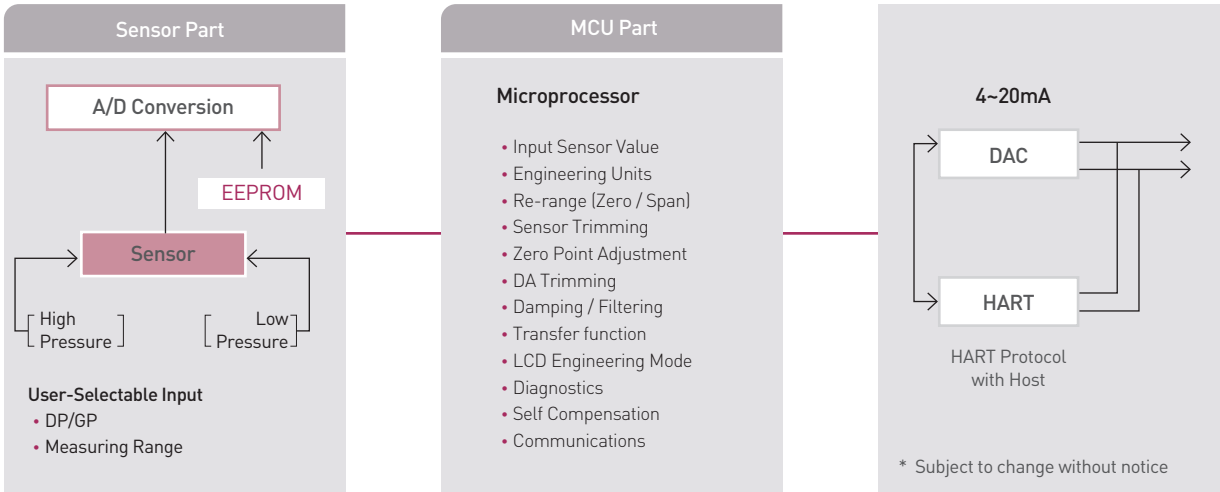

Features

• Superior Performance

· High Reference Accuracy : ±0.04% of Calibrated Span
· for range 1 (DP & GP) ±0.1% of Span
For span less than 4:1, accuracy = ±[0.025x(URL/span)]% of span
· for range 2 (DP & GP)±0.10% of Span
For spans less than 10:1,
accuracy = ± [0.05 + 0.005 x (URL/span)] % of Span
· for ranges 3 ~ 5 (DP & GP & HS)±0.040% of Span
For spans less than 5:1,
accuracy = ± [0.015 + 0.005 x (URL/span)] % of Span
· for DP6 & GP6 & HS7 & AP 3~5 ±0.075% of Span
For spans less than 10:1,
accuracy = ± [0.025 + 0.005 x (URL/span)] % of Span
· Long-Term Stability (0.125% URL for 5year)
· High Rangeability (100 : 1)(for the range 3~6)

• Flexibility

· Data Configuration with HART Configurator
· Zero Point Adjustment

• Reliability

· Continuous Self-Diagnostic Function
· Automatic Ambient Temperature Compensation
· Fail-mode Process Function
· EEPROM Write Protection

Transmitter Description

ATP3500 Pressure transmitter can be easily configured from any host that support the HART protocol.

• Basic Setup

· Operational Parameters.
· 4~20mA Points (Zero/Span)
· Engineering Units
· Damping Time : 0.25 ~ 60 sec
· Tag : 8 alphanumeric characters
Long Tag : 32 alphanumeric characters
· Descriptor : 16 characters
· Message : 32 characters.
· Date : day/month/year

• Calibration and Trimming

· Lower/Upper Range (zero/span)
· Sensor Zero Trimming
· Zero Point Adjustment
· DAC Output Trimming
· Transfer Function
· Self-Compensation

• Self-Diagnosis and Others

· CPU & Analog Module Fault Detection
· Communication Error
· Fail-mode Handling
· LCD Indication
· Temperature Measurement of Sensor Module

Function

• Range and Sensor Limits

· Refer to Table 1.

• Zero and Span Adjustment Limits

· Zero and span values can be set anywhere within the range limits stated in Table 1.(Page 9)
Span must be greater than or equal to the minimum span stated in Table 1.(Page 9)

• Output (Analog Current and Digital Data)

· LCD Display & ENG Mode
· Two wire 4~20mA
user-configurable for linear or square root output,
digital process
value superimposed on 4~20mA signal,
available to any host that conforms to the HART protocol

• Power Supply & Load Requirement

· External power supply required.
*250 ohm load-- 15.5 Vdc / 17.5 Vdc(Ex ia)
*up to a 550 ohm load -- 24 Vdc
Max. Loop Resistance = (E - 10.5) / 0.022
(E = Power Supply Voltage)
· Voltage Range : 10.5 / 12.5(Ex ia) to 45 Vdc
· Voltage Rating : 24 Vdc ±30%
· Loop Load
0 ~ 1,500 ohm -- Operation
250 ~ 550 ohm -- HART Communications

• EMC Conformity Standards

· CE EMC Conformity Standards[EN61326-1, EN61326-3]

• Failure Mode

	Normal	NAMUR NE43
Low Alarm	≤3.78 mA	≤3.6 mA
Low Saturation	3.9 mA	3.8 mA
High Saturation	20.8 mA	20.5 mA
High Alarm	≥21.1 mA	≥21.1 mA

• Ambient Temperature

· -40°C to 85°C (without condensing)

• Process Temperature Limits

(Range codes and approval codes may effect limits)
· -40°C to 120°C (-104 to 248°F)

Function

• Isolation

· Input/output isolated to 500Vrms (707 Vdc)

• Working Pressure Limits (silicone oil)

· Model D & G	0 ~ 5 MPa	# 1
	0 ~ 13 MPa	# 2
	0 ~ 25 MPa	# 3~6
· Model HS	0 ~ 32 MPa	# 3~5
	0 ~ 75 MPa	# 7
· Model AP	0 ~ 0.25 MPa	# 3
	0 ~ 1.5 MPa	# 4
	0 ~ 2.5 MPa	# 5

• Hydrostatic Test Pressure

· Model D & G	8 MPa	# 1
	20 MPa	# 2
	38 MPa	# 3~6
· Model HS	48 MPa	# 3~5
	60 MPa	# 7
· Model AP	0 ~ 0.38 MPa	#3
	0 ~ 2.25 MPa	# 4
	0 ~ 3.75 MPa	# 5

• Burst Pressure

· Model D & G	69 MPa	# 1 ~ 6
· Model HS	132 MPa	# 3~5
	80 MPa	# 7
· Model AP	1.05 MPa	# 3
	4 MPa	# 4
	7 MPa	# 5

• 5 Digit LCD

· Express all pressure unit and flow unit.
· Use 5 digit.
· Select decimal place (0 to 4)
· PV, % and mA value indicate on LCD rotationally & automatically.
· Back Light option

• User define unit function

• Change main parameter by Button

· Change Unit
· Change Upper range value
· Change Lower range value
· Change the Damping Second
· Select the Decimal Place
· Zero Trim
· Zero Adjustment

- Moving within Menu : Zero
- Moving to below Menu : Span
- Moving Top Menu : Zero+Span

Button Menu tree

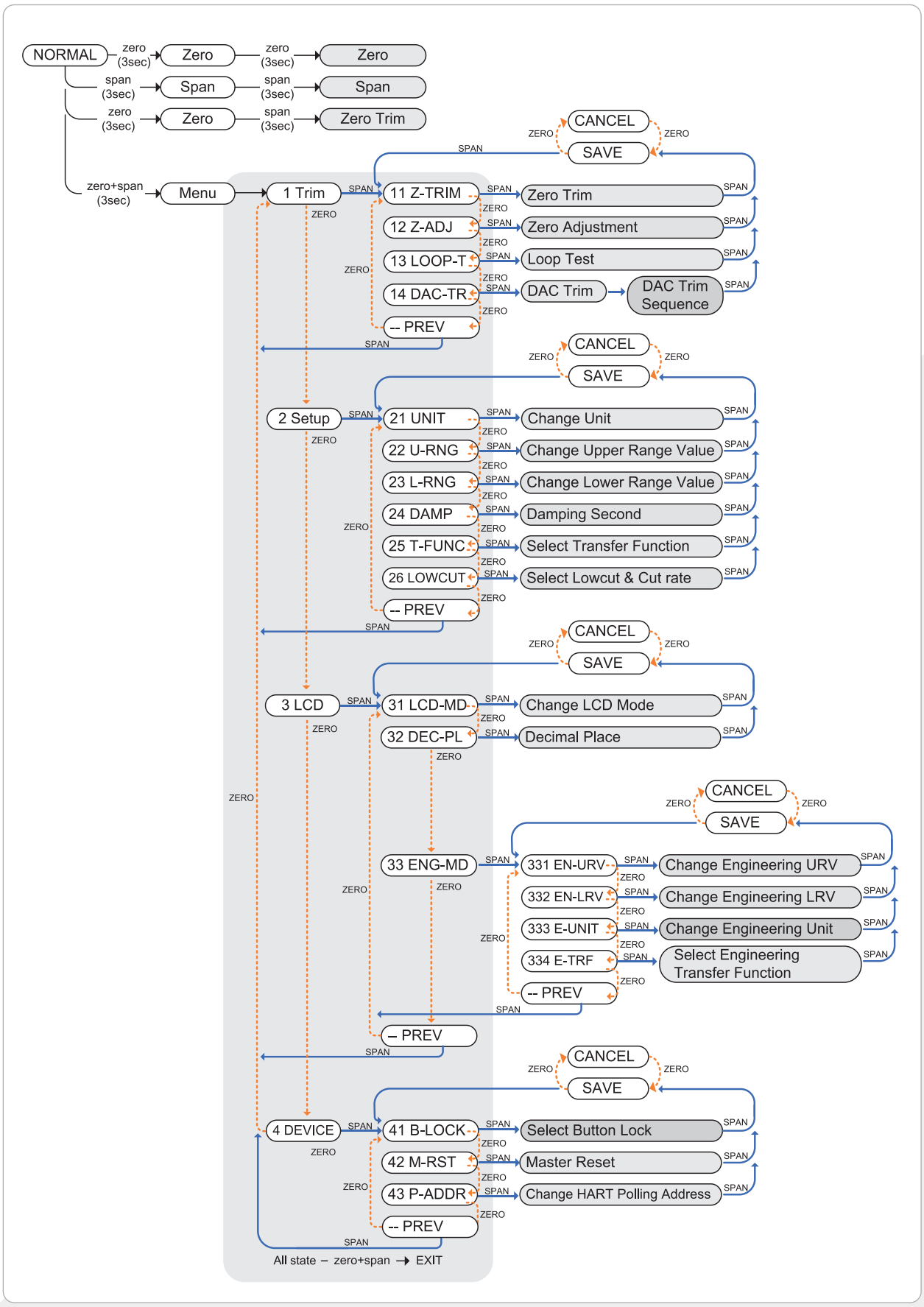

Physical Specifcations

• Wetted Materials

· IsolatingDiaphragms 316L SST, HAST-C, Monel, Tantalum
· Drain/Vent Valves 316 SST, HAST-C
· Flangesand Adapters 316SST(ASTMCF8M), HAST-C
· O-ring Viton, PTFE

• Non-wetted materials

· Fill Fluid Silicone oil or Inert fill
· Bolts 316 SST/304SST (Adapter)
· Electronics Housing Aluminum or 316L SST (Option)
Flameproof and Waterproof (IP67)
· Cover O-ring NBR
· Paint Epoxy-Polyester
· Mounting Bracket 304SST with U-bolt (304SST) for 2-inch pipe
· Nameplate 304 SST

• Electrical connections

· 1/2-14 NPT conduit with M4 Screw Terminals
· G1/2 Female Adapter(option)

• Process Connections

· 1/4-18 NPT on 2.126 inch (54.0 mm) centers on flanges for Standard
· 1/2-14 NPT on Process Adapter (option)
*Refer to drawing in the last page

• Weight

· 3.51 kg (Standard - excluding options)
5kg (SST Housing- excluding options)

Exploded drawing of APT3500

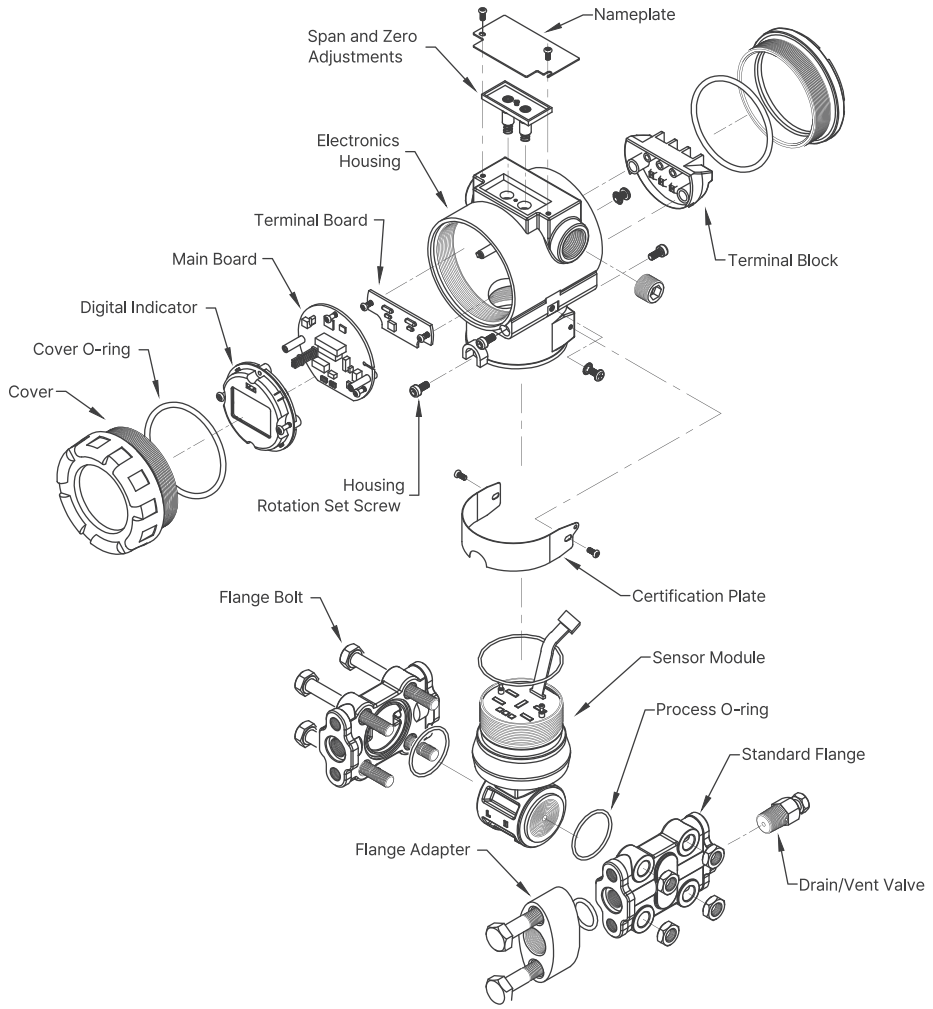

Hazardous Location Certifications (option)

• KCs Flameproof / Dust Ignition-proof K1 Code :

Exd IIC T6, IP67(-20°C ≤ Tamb ≤+60°C)
Output : 4 ~ 20mA or HART
Process Temperature : T6 : Tprocess ≤ 80°C
T2 : Tprocess ≤ 290°C
Ex tD A20 T85°C, IP67(Tamb = -20°C ~ +60°C)
Output : 4 ~ 20mA or HART
Process Temperature : ≤ +80°C

• ATEX Flameproof E1 Code :

Ⓔx II 2G Ex d IIC T6 – T4 Gb IP 66/IP 67
Ambient temperature: -20°C to +60°C
Process temperature : max 80°C for T6
max 95°C for T5
max 120°C for T4

• ATEX Intrinsic Safety E2 Code :

Ⓔx II 1G Ex ia IIC T4 Ga, T5 Ga
Process Temperature for T4: -40°C ≤ Ta ≤ +70°C
for T5: -40°C ≤ Ta ≤ +40°C
HART : 250 Ohm load - 17.5Vdc
12.5 to 45 Vdc

• FM Explosion-proof F1 Code :

Class I, Division 1, Groups B, C, D; T4
Ta=-20°C to +60°C; Type 4X
Class I, Zone 1, Group IIB+H2 T4
Ta=-20°C to +60°C; Type 4X
Ambient temperature : -20°C to +60°C for T4
Process temperature : -40°C to +120°C for T4

• IECEx Intrinsic Safety I2 Code :

Ex ia IIC T4 Ga(-40°C ≤ Ta ≤ +70°C)
Ex ia IIC T5 Ga(-40°C ≤ Ta ≤ +40°C)

• EAC Flameproof R1 Code :

1Ex d IIC T6... T4 Gb X IP66/IP67
Ambient Temperature : -60°C ... +60°C
T6 for process ≤ 80°C
T5 for process ≤ 95°C
T4 for process ≤ 120°C

• EAC Intrinsic Safety R2 Code :

0Ex ia IIC T5... T4 Ga X IP66/IP67
1Ex ia IIC T5... T4 Gb X IP66/IP67
Operating Temperature :
T4 : -60°C ... +70°C
T5 : -60°C ... +40°C

• NDK Approval Certification

· Türkiye Nuclear Regulatory Authority
· Safety Class 3 (NP-001-15, NP-001-97)
· Code # : TR-1M0-154
· Certi # : E-70469638-120.02-15701

Connection Diagram of Signal, Power HHT for Transmitter

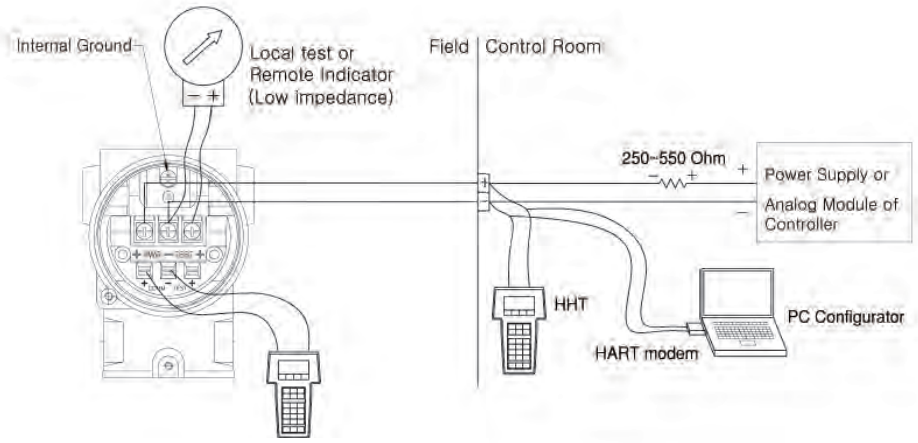

1. HHT(HART Communicator) or PC Configurator may connected at any termination point in the signal loop.
2. HART Communication requires a loop resistance between 250 ~ 550 ohm @ 24 Vdc.
3. Transmitter operates at 10.5 to 45 Vdc on transmitter terminal voltage.

APT 3500

Bottom Connection for Vertical Process Line

Easy Installation, Vertical Process line. Industrial standard connection. Not require additional retrofitted Flanges or Adapters.

Background

Traditionally, some of applications require vertical installation such as flow application, orifice assemble line, special location and etc. The traditional connections may require additional flanges or adapters, which is inconvenience and additional charge. (Except changing size of process connection).

Advantage

Direct connection from vertical process line with manifold. And it is not required additional retrofitted flanged or adapter to connect vertical process line or assemble manifold because it has industrial standard size 54 mm between L & H process connection in the transmitter.
Moreover, Manifold can be connected directly.

Dimensions

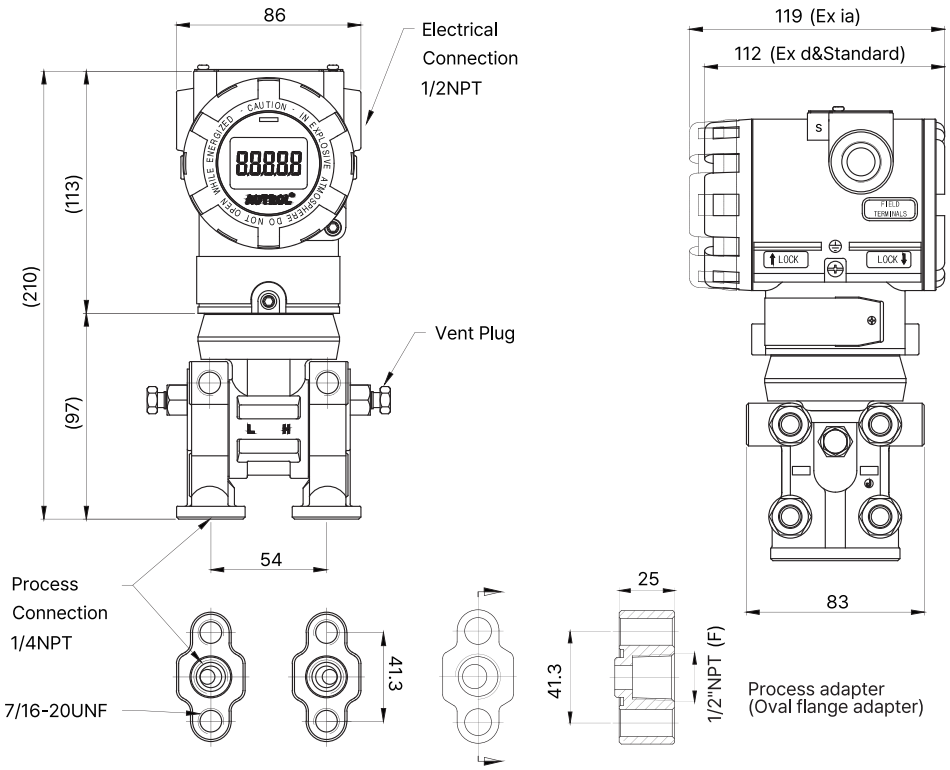

General Specifications

1. APT3500 Pressure Sensor Range

(Rangeability : #2=20:1 / #3=50:1 / 3~7=100:1)
<Table 1>

Range Code	DP		GP		AP		HS	
	Calibrated Span(kPa)	Lower Range(kPa)	Calibrated Span(kPa)	Lower Range(kPa)	Calibrated Span(kPa)	Lower Range(kPa)	Calibrated Span(kPa)	Lower Range(kPa)
1	0.0625 ~ 1.25	-1.25	0.0625 ~ 1.25	-1.25	NA	NA	NA	NA
2	0.15 ~ 7.5	-7.5	0.15 ~ 7.5	-7.5	NA	NA	NA	NA
3	0.65 ~ 65	-65	0.65 ~ 65	-65	2.5 ~ 250	0	0.65 ~ 65	-65
4	2.5 ~ 250	-250	2.5 ~ 250	-100	15 ~ 1,500	0	2.5 ~ 250	-250
5	21 ~ 2,100	-2,100	21 ~ 2,100	-100	25 ~ 2,500	0	21 ~ 2,100	-2,100
6	140 ~ 14,000	-14,000	140 ~ 14,000	-100	NA	NA	NA	NA
7	NA	NA	NA	NA	NA	NA	400 ~ 40,000 (Gauge Only)	0

Code	kPa	kgf/cm²	bar	psi	inH2O@4°C	mmH2O@4°C	inHg@0°C
1	1.25	0.012	0.0125	0.181	8	127.464	0.369
2	7.5	0.076	0.075	1.087	30.11	764.787	2.214
3	65	0.662	0.65	9.427	260.958	6,628.154	19.194
4	250	2.549	2.5	36.259	1,003.685	25,492.9	73.825
5	2,100	21.414	21	304.579	8,430.958	214,140.359	620.129
6	14,000	142.76	140	2,030.527	56,206.38	1,427,602	4,134.197

2. Electrical Specifications

Power Supply	10.5 to 45 Vdc (min 12.5 Vdc @ Ex ia)	Output Signal	4 ~ 20 mA dc / HART
HART loop resistance	250 ~ 550 ohm	Isolation	500 Vrms (707 Vdc)

3. Performance Specifications

Reference Accuracy			± 0.04% of Span *See the specification feature on 3pgae	Ambient Temperature	-40 ~ +85°C
				LCD Meter Ambient Temp	-30 ~ +80°C
				Humidity Limits	5% ~ 100% RH
Ambient Temp.	Range 1(DP&GP)		±[0.2% URL+0.08% Span] / 28°C	Process Temperature Limits	-40°C ~ +120 °C
	Range 2(DP&GP)		±[0.13% URL+0.12% Span] / 28°C		
	Range 3~6(DP,GP,HS)		±[0.024% URL+0.045% Span] / 28°C		
	HS7, AP3~5		±[0.019% URL+0.125% Span]		
Stability			±0.125% URL for 60 Months	Power Supply Effects	±0.005% of Span per Volt
Static Pressure	Zero	Range 1	±0.12% of URL per 0.7MPa	Position Effect (90degree)	Zero Shift up to± 0.4 KPa
		Range 2	±0.25% of URL per 7MPa		
		Range 3~6	±0.05% of URL per 7MPa		
	Span	Range 1	±0.15% of reading per 0.7MPa	Mountiong Postion Effects	Zero Shift up to 400Pa No Span Effect
		Range 2	±0.4% of reading per 7MPa		
		Range 3~6	±0.1% of reading per 7MPa		

4. Physical Specifications

Isolating Diaphragm	316L SST	Process Connection Size	1/4 ~ 18 NPT
Drain & Vent Valve	316 SST	Adapter Bolts	1/2 ~ 14 NPT
Flange & Adapter	316 SST	Electrical Connections	1/2 ~ 14 NPT with M4
O-ring	Viton, PTFE	Weight (excluding Option Items)	3.51 Kg (Standard) 5 Kg (SST Housing)
Electronic Housing	Alloy, 316 SST	2" Pipe Stanchion Type bracket	Angle or Flat type
Bolts & Bolting Flange	304 SST	Housing Class	Ex, IP66/67

Ordering Information

MODEL	Code	Description
APT3500	-D	Differential Pressure Transmitter (Static Pressure 25MPa)
	-G	Gauge Pressure Transmitter
	-HS	Differential Pressure Transmitter for High Line Pressure (Static Pressure 32MPa)
	-A	Absolute Pressure Transmitter

Ranges		DP		GP		HS		AP	
		Calibrated Span(kPa)	Lower Range(kPa)	Calibrated Span(kPa)	Lower Range(kPa)	Calibrated Span(kPa)	Lower Range(kPa)	Calibrated Span(kPa)	Lower Range(kPa)
	1	0.0625 ~ 1.25	-1.25	0.0625 ~ 1.25	-1.25	NA	NA	NA	NA
	2	0.15 ~ 7.5	-7.5	0.15 ~ 7.5	-7.5	NA	NA	NA	NA
	3	0.65 ~ 65	-65	0.65 ~ 65	-65	0.65 ~ 65	-65	2.5 ~ 250	0
	4	2.5 ~ 250	-250	2.5 ~ 250	-100	2.5 ~ 250	-250	15 ~ 1,500	0
	5	21 ~ 2,100	-2,100	21 ~ 2,100	-100	21 ~ 2,100	-2,100	25 ~ 2,500	0
	6	140 ~ 14,000	-14,000	140 ~ 14,000	-100	NA	NA	NA	NA
	7	NA	NA	NA	NA	400 ~ 40,000 (Gauge Only)	0	NA	NA
	X	Special							

Mounting Flange /Material		Flange & Adapter	Vent Plug	Diaphragm
	M11	316 SST	316 SST	316L SST
	M12	316 SST	316 SST	HAST - C
	M13	316 SST	316 SST	Monel
	M14	316 SST	316 SST	Tantalum
	M15	316 SST	316 SST	316L SST + Gold Coating
	*M21	HAST - C	HAST - C	HAST - C
	*M22	HAST - C	HAST - C	Monel
	*M23	HAST - C	HAST - C	Tantalum

Hazardous Location				
	K0	Maker Standard (Waterproof : IP66/IP67)		
	K1	KCS Flameproof Approval		
	E1	ATEX(KEMA) Flameproof	E2	ATEXIntrinsicSafety
	I2	IECEx Intrinsic Safety	F1	FM Explosion-proof
	R1	EAC Flameproof	R2	EAC Intrinsic Safety
	R3	EAC Flameproof, Intrinsic Safety		

Fill Fluid	1	Silicone (DC200)	2	Inert Fill Fluid (Halocarbon Oil)		
Process Connection	S	1/4 - 18 NPT (Standard)	O	1/2-14 NPT Female(Adapter)	X	Special
Electrical Connection	1	1/2-14NPT Epoxy-Polyester Painted Aluminum	2	G1/2-14 Epoxy-Polyester Painted Aluminum(Adapter)	X	Special

Option				
	M1	LCD Indicator(5digit)	M2	Back Light LCD Indicator
	BC	Bottom Process Connection		
	LPI	Lightning Protector (Internal)	LPE	Lightning Protector (External)
	K	Oil Free Finish		
	F1	Side Vent / Drain Top		
	F2	Side Vent / Drain Bottom		
	2W	2 Way Manifold (SST) : Remote type	2WF	Flange type
	3W	3 Way Manifold (SST) : Remote type	3WF	Flange type
	5W	5 Way Manifold (SST) : Remote type	5WF	Flange type
	BA	Stainless Steel Bracket (Angle type) with SST Bolts		
	BF	Stainless Steel Bracket (Flat type) with SST Bolts		
	ST	Stainless Steel Housing		
	T	Teflon O-Ring (Wetted Part)		
	MR	Marine & Offshore Type approval by KR (shall use LPI option) *		
	SL	SIL2 (Safety certified to IEC 61508 with certificate, FMEDA) by SGS/TUV *		
	N4	NAMUR NE43 Alarm & Saturation Output. (Default : Alarm Down 3.6mA)		
	EE	Egypt El Dabba NPP Project Requirement		
	X	Special		

Example : APT3500-D5-M11-E1-1-S-1-M1-BA
Note 1 : Request to manufacturer for Draft Range, Absolute (small pressure and vacuum) and Items marked " * " before order.
Note 2 : Depending on applications, the APT3500-L model offers various special remote diaphragm seal models.
please contact the manufacturer for details.

Installation WithMounting Bracket

01 PIPE MOUNTING BRACKET MODEL FLAT TYPE

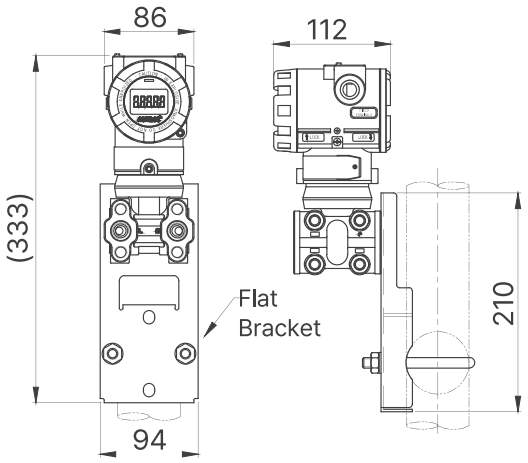

< Standard Model >

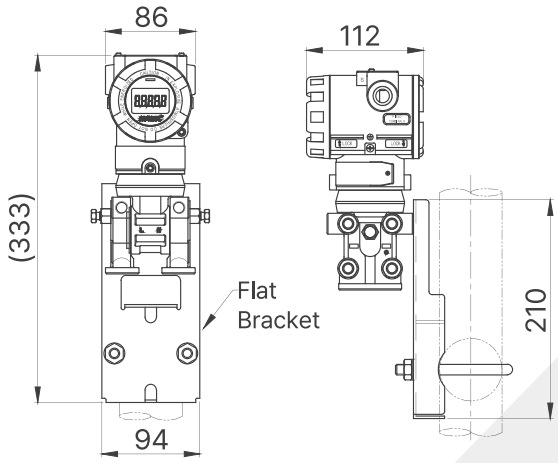

< MP Type Model >

02 PIPE MOUNTING BRACKET MODEL ANGLE TYPE

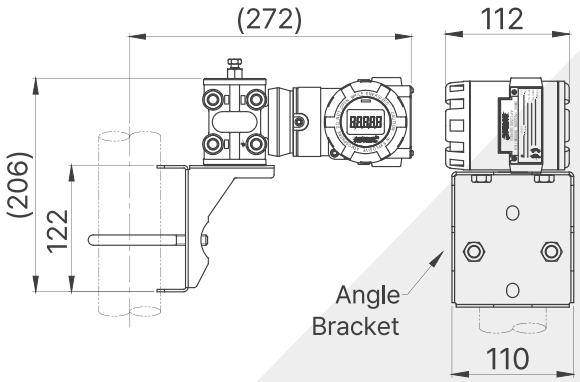

< Standard Model >

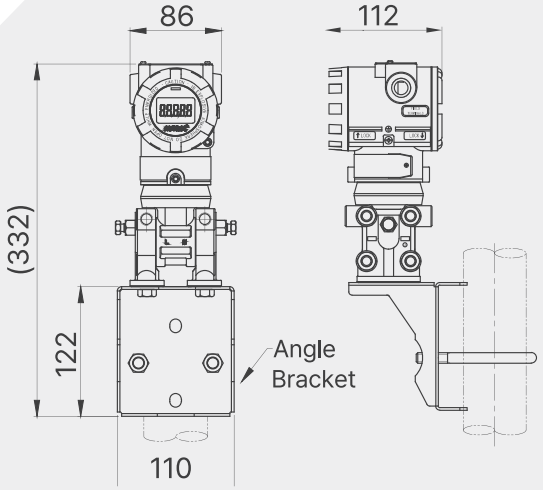

< MP Type Model >

Dimensions of Transmitter (mm)

Dimensions of Transmitter may vary depending on the option selected.
Please contact the production company for more details.

[Standard IP66/67 / Ex d / Ex ia Model]

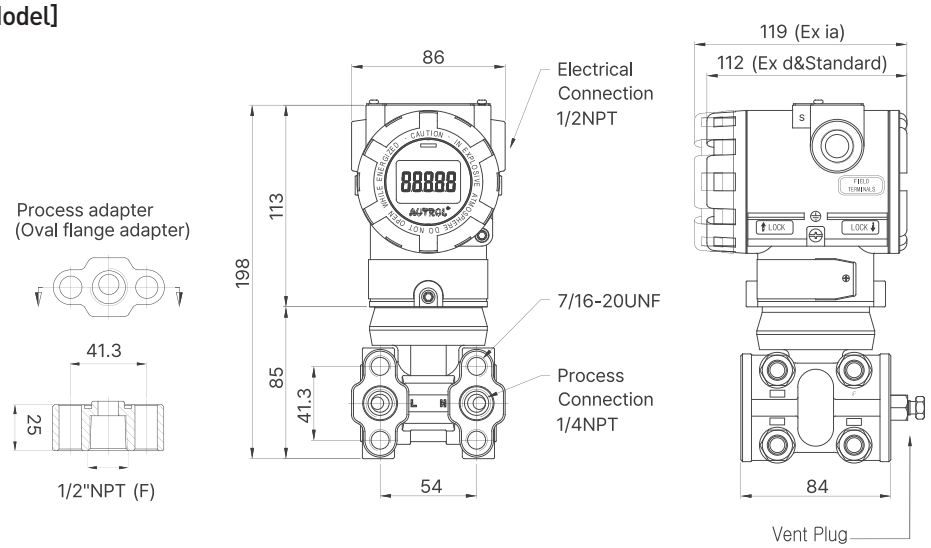

[High Static Pressure Model]

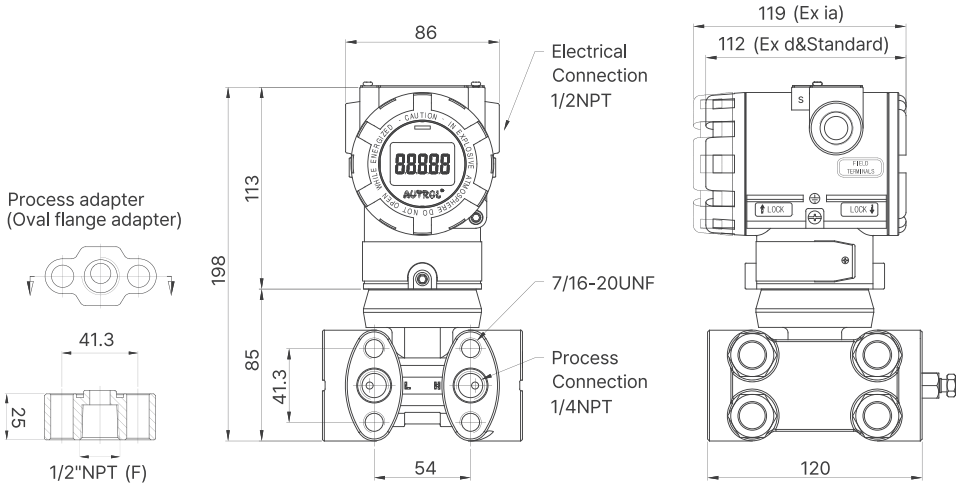

DUON System Co., Ltd.

298-29, Gongdan-ro, Gunpo-si, Gyeonggi-do, Korea 15809
T : +82. 31. 389. 6100 F : +82. 31. 429. 7200 E : autrol@duon.co.kr
www.autrol.com

Copyright © 1989 DUON System Co., Ltd. All rights reserved.

AUTROL®, AUTROLTM are trade mark of smart transmitter brand series to measure Pressure, Temperature and Level, which is manufactured & owned by DUON System Co., Ltd(hereafter DUON) since 1989. AUTROL®, AUTROLTM series also provide services of electric appliance installation, repair of electric, magnetic measuring instruments, electric appliance repair, repair of instruments and appliances for measuring and testing, repair of computer hardware, repair of electronic application machines and apparatus, repair of instruments and appliances for rotating, repair of electric power distribution machines and apparatus, repair of control machines and apparatus, computer hardware maintenance and administration, computer hardware installation. APT3500-Differential and high accuracy pressure Transmitter APT3100-Differential pressure Transmitter, APT3200-Gauge & Absolute pressure Transmitter, ATT2X00 series-Temperature Transmitter, AI100-Field Indicator, ALT6XX0 series-Level Transmitter.